ELECTRIC LEGEND

SYMBOL	DESCRIPTION
LIGHTING AND LIGHTING CONTROLS	
	LUMINAIRE (REFER TO THE LUMINAIRE SCHEDULE) NOTE THAT OTHER SHAPES MAY ALSO BE USED TO REPRESENT LUMINAIRES
	SHADED LUMINAIRES DENOTE THOSE CONNECTED TO EMERGENCY OR STANDBY POWER AS APPLICABLE (UNSWITCHED LUMINAIRES ARE EGRESS LIGHTS AND/OR NIGHT-LIGHTS THAT OPERATE 24/7)
WALL MOUNT	SINGLE / DOUBLE SIDED EXIT SIGN CONNECT AHEAD OF SWITCHING & CONFIGURE ARROWS TO INDICATE DIRECTION OF EGRESS TRAVEL
	EMERGENCY LIGHTING UNIT WITH 90-MINUTE BATTERY BACKUP AND ASSOCIATED REMOTE HEADS WHERE APPLICABLE. CONNECT TO LOCAL LIGHTING CIRCUIT AHEAD OF SWITCHING
	OUTDOOR AREA SITE LIGHTING STANDARD NUMBER OF LUMINAIRE HEADS AS INDICATED ON DRAWINGS.
A NL a EL	A = LUMINAIRE TYPE, NL = NIGHT-LIGHT (UNSWITCHED), a = SWITCHING DESIGNATION, EL = EGRESS LUMINAIRE (ILLUMINATES PATH OF EGRESS, UNSWITCHED UNLESS OTHERWISE NOTED)
$	LIGHTING SWITCH (KEYS: 2 = 2-POLE, 3 = 3-WAY, 4 = 4-WAY, D=DIMMER, K=KEYED, T = TIMER SWITCH, M = MOMENTARY-CONTACT, P = SWITCH W/PILOT LIGHT)
TYPE	CEILING-MOUNTED OCCUPANCY SENSOR. DUAL TECHNOLOGY UNLESS OTHERWISE NOTED BY TYPE. TYPE "IR" = INFRARED, TYPE "US" = ULTRASONIC
TYPE#	WALL-MOUNTED OCCUPANCY SENSOR SWITCH. DUAL TECHNOLOGY UNLESS OTHERWISE NOTED BY TYPE. TYPE "IR"=INFRARED, TYPE "US"=ULTRASONIC, "V"=VACANCY SENSOR, "#" = CONTROLLED CIRCUITS.
RECEPTACLES AND MISCELLANEOUS OUTLETS	
	SINGLE ("SIMPLEX"), DUPLEX, AND DOUBLE DUPLEX ("QUAD") RECEPTACLE RESPECTIVELY
	GFI / GFCI RECEPTACLES
	FULL SWITCHED RECEPTACLES
TYPE	FLOOR OUTLET - POWER AND / OR TECHNOLOGY
H C T 42" W SW L	RECEPTACLE ATTRIBUTES 42" = MOUNT RECEPTACLE AT THIS HEIGHT ABOVE GRADE / FINISHED FLOOR C = INSTALL ABOVE COUNTER AND BACKSPLASH H = INSTALL RECEPTACLE HORIZONTALLY L = LIT (PROVIDE ILLUMINATED FACE OR INDICATOR LIGHT TO INDICATE THERE IS POWER TO RECEPTACLE) SW = SPLIT WIRED T = TAMPER-RESISTANT W = WEATHER PROOF WHILE IN USE COVER AND WEATHER RESISTANT RECEPTACLE
DOOR OPERATORS/DEVICES	
	ELECTRIC DOOR OPERATOR MANUAL (LEFT) AUTOMATIC (RIGHT)
	PUSH PLATE FOR MANUAL CONTROL OF ELECTRIC DOOR OPERATOR
MISCELLANEOUS	
T TS	LOW VOLTAGE THERMOSTAT (LEFT) AND TEMPERATURE SENSOR (RIGHT)
L R	LINE VOLTAGE THERMOSTAT (LEFT) AND REVERSE ACTING THERMOSTAT (RIGHT)
$ $MS $MSR	MOTOR RATED TOGGLE SWITCH, MANUAL STARTER WITH PILOT LIGHT, AND MANUAL STARTER WITH PILOT LIGHT WITH EXTERNAL RELAY FOR CONTROL OR MONITORING RESPECTIVELY - ALL MAY BE KEYED "K"
	HEAVY DUTY DISCONNECT SWITCH (NON-FUSED) (LEFT) HEAVY DUTY DISCONNECT SWITCH (FUSED) (RIGHT)
M	LINE VOLTAGE MOTOR OPERATED DAMPER
	CONTACTOR
	HAND DRYER
	ELECTRICAL PANELBOARD OR DISTRIBUTION BOARD (DIMENSIONS MAY VARY / FLUSH OR SURFACE MOUNTED AS INDICATED)
PAD POLE	OIL FILLED TRANSFORMER

TECHNOLOGY LEGEND

SYMBOL	DESCRIPTION
TELECOMMUNICATIONS	
	WALL VOICE OUTLET W = WALL TELEPHONE
	WALL DATA OUTLET WAP = WIRELESS ACCESS POINT
	WALL VOICE AND DATA OUTLET
	WALL DATA AND RF OUTLET

TECHNOLOGY LEGEND

SYMBOL	DESCRIPTION
C	CEILING SECURITY CAMERA
DL	DOOR RELEASE BUTTON
LD	LOCK DOWN BUTTON
PS	PANIC BUTTON
PR	PROXIMITY READER
M	WALL MOTION SENSOR
DS	DOOR, STATUS SENSOR
NURSE CALL SYSTEMS	
PC	WALL PULL CORD T = TOILET, B = BATH
D	WALL DOME LIGHT

ELECTRIC LEGEND

SYMBOL	DESCRIPTION
SINGLE LINE DIAGRAM	
M	ELECTRIC UTILITY COMPANY METER AND ASSOCIATED CURRENT TRANSFORMERS
HD M	CUSTOMER ELECTRIC METER AND ASSOCIATED CURRENT TRANSFORMERS HD = HIGH DENSITY METERING CABINET/BANK MOUNTED TO TIGHTLY GROUP ALL METERS TOGETHER
PANEL NAME	ELECTRICAL PANELBOARD OR DISTRIBUTION BOARD
	SURGE PROTECTIVE DEVICE
WIRE / CABLE / RACEWAY	
LPA-1,3	BRANCH CIRCUIT HOME RUN WITH PANEL NAME AND CIRCUIT NUMBER(S)
	CABLING / RACEWAY INSTALLED CONCEALED IN WALLS OR ABOVE CEILING
	CABLING / RACEWAY INSTALLED BELOW FLOOR OR GRADE
	CABLE TRAY
J	FLUSH MOUNTED JUNCTION BOX OR PULL BOX AS APPLICABLE FOR APPLICATION
P	FLUSH MOUNTED PULL BOX
UP DN	CONDUIT UP OR DOWN

ABBREVIATIONS

42"	DISTANCE ABOVE FINISHED FLOOR / GRADE / PAVEMENT
AF	AMP FRAME OF FUSED SWITCH OR CIRCUIT BREAKER
AFCI	ARC-FAULT CIRCUIT INTERRUPTER
AIC	AMPS INTERRUPTING CURRENT
AT	AMP TRIP OF FUSED SWITCH OR CIRCUIT BREAKER
ATS	AUTOMATIC TRANSFER SWITCH
BAS	BUILDING AUTOMATION SYSTEM
C.T.C.	WORK UNDER DIVISION 27 OR 28 AS APPLICABLE
C/B	CIRCUIT BREAKER
CH	COUNTER HEIGHT OR SPECIAL HEIGHT DEVICE
DW	DISHWASHER
E	EMERGENCY
E.C.	WORK UNDER DIVISION 26
EMS	ENERGY MANAGEMENT SYSTEM
EPO	EMERGENCY POWER OFF
ER	EQUIPMENT ROOM
ERM	ENERGY REDUCTION MAINTENANCE SWITCH
ESP	EMERGENCY STANDBY RATING
ETR	EXISTING TO REMAIN
EWC	ELECTRIC WATER COOLER
EX.	EXISTING
FBO	FURNISHED BY OTHERS - INSTALLED AND WIRED BY E.C.
FIBO	FURNISHED AND INSTALLED BY OTHERS - WIRED BY E.C.
FP	RECEPTACLE TO BE USED FOR A FLAT PANEL DISPLAY. PROVIDE ARLINGTON 8X10 TV BOX; CATALOG NUMBER: TVBU810 AND TX BOX COVER PLATE; CATALOG NUMBER: TVB810C.
FWE	FURNISHED WITH EQUIPMENT BY OTHERS - INSTALLED AND WIRED BY E.C.
GD	GARBAGE DISPOSAL
GFEP	GROUND FAULT EQUIPMENT PROTECTION
GFI / GFCI	GROUND FAULT CIRCUIT INTERRUPTER DEVICE
GND	GROUND
H.C.	WORK UNDER DIVISION 23
H.O.A.	"HAND - OFF - AUTO" SWITCH
IG	ISOLATED GROUND
LR	LEGALLY REQUIRED STANDBY
LI	LONG - INSTANTANEOUS
LSI	LONG - SHORT - INSTANTANEOUS
LSIG	LONG - SHORT - INSTANTANEOUS - GROUND FAULT
MCB	MAIN CIRCUIT BREAKER
MFR	MANUFACTURER
MLO	MAIN LUGS ONLY
MTS	MANUAL TRANSFER SWITCH
MW	MICROWAVE OVEN
NIC	NOT IN CONTRACT (SHOWN FOR REFERENCE ONLY)
NTS	NOT TO SCALE
OFE	OWNER-FURNISHED EQUIPMENT - INSTALLED AND WIRED BY E.C.
OS	OPTIONAL STANDBY
P.C.	WORK UNDER DIVISION 22
(R)	RELOCATE
S.C.	WORK UNDER DIVISION 21
SCCR	SHORT CIRCUIT CURRENT RATING
SPD	SURGE PROTECTIVE DEVICE
ST	SHUNT TRIP
TAAC	TO ABOVE ACCESSIBLE CEILING
TR	TAMPER RESISTANT
TTB	TELEPHONE TERMINAL BOARD
TYP	TYPICAL
UCR	UNDER COUNTER REFRIGERATOR
UL	UNDERWRITER'S LABORATORY
U.L.S.E.	LISTED FOR SERVICE ENTRANCE
UNO	UNLESS NOTED OR INDICATED OTHERWISE ON DRAWINGS OR IN SPECIFICATIONS
VFD / VSD	VARIABLE FREQUENCY / SPEED DRIVE
VIF	VERIFY IN FIELD
VM	VENDING MACHINE
VP	VANDAL PROOF
W / WP	WEATHERPROOF
WG	WIRE GUARD
WR	WEATHER RESISTANT

PLAN-VIEW AND GRAPHIC LINE TYPES

WORK SHOWN BOLD-CONTINUOUS INDICATES NEW WORK (UNLESS OTHERWISE INDICATED)

WORK SHOWN FADED INDICATES EXISTING WORK TO REMAIN OR NEW WORK BY OTHERS AS APPLICABLE (UNLESS OTHERWISE INDICATED)

WORK SHOWN BOLD-DASHED INDICATES SELECTIVE DEMOLITION WORK (UNLESS OTHERWISE INDICATED)

DRAWING SET APPEARANCE

TO BETTER COMMUNICATE SCOPE TO PERMIT AGENCIES AND CONTRACTORS, EACH DRAWING IN THIS DRAWING SET HAS BEEN CREATED IN BOTH "COLOR" AND "BLACK AND WHITE". THERE EXISTS A COLOR LAYER WITHIN EACH DRAWING WHERE VISIBILITY IS CONTROLLED THROUGH THE PDF LAYER MANAGER. THIS LAYER VISIBILITY CAN BE TOGGLED DISPLAYING EITHER "COLOR" OR "BLACK AND WHITE". TO MAINTAIN SCOPE BASED SHADING WHEN PRINTING TO PAPER, BLACK AND WHITE NEEDS TO BE VISIBLE. FOR FURTHER INSTRUCTIONS, REFER TO CONTRACTOR RESOURCES ON OUR WEBSITE AND DOWNLOAD "DRAWING COLOR INSTRUCTIONS".
WWW.KLHENGRS.COM - CONTRACTOR RESOURCES (RIGHT HAND SIDE OF PAGE).

GENERAL ELECTRICAL INSTALLATION NOTES

A. CODE COMPLIANCE: PROVIDE ALL ELECTRICAL WORK COMPLIANT WITH ALL PREVAILING CODES.

B. LISTINGS: PROVIDE MATERIALS, COMPONENTS AND ASSEMBLED COMPONENTS WITH LISTINGS AND LABELS FROM A NATIONALLY RECOGNIZED TESTING LABORATORY (NRTL), MANUFACTURED, LISTED AND LABELED FOR THEIR INTENDED USE.

C. RATED BUILDING SURFACES: SEPARATE DEVICE BOXES BY A MINIMUM OF 6 INCHES WHERE INSTALLED BACK-TO-BACK WITHIN DEMISING WALLS TO MAINTAIN REQUIRED FIRE AND SOUND RATING (TYPICAL OF ALL DEVICE BOXES INSTALLED ON DEMISING WALLS). PROVIDE LISTED FIRE-RATED WRAPS AROUND ALL RECESSED OUTLET, DEVICE AND EQUIPMENT BOXES IN FIRE/SMOKE RATED WALLS, CEILINGS AND FLOORS TO MEET OR EXCEED THE RESPECTIVE FIRE/SMOKE RATING OF THE SURFACE.

D. RATED PENETRATIONS: SEAL ALL PENETRATIONS THROUGH FIRE-RATED AND/OR SMOKE-RATED MEMBRANES (FLOORS, WALLS, CEILINGS, ETC.) USING SEALANT PRODUCTS THAT MEET OR EXCEED THE RATING OF THE RESPECTIVE MEMBRANE.

E. GANGED DEVICES: INSTALL WIRING DEVICES GANGED WHEREVER POSSIBLE FOR INSTANCES WHERE THEY ARE SHOWN TOGETHER. THIS INCLUDES LOCATIONS ABOVE COUNTERS AND WORK SURFACES WHERE APPLICABLE.

F. OUTLET BOXES NEAR CORNERS: INSTALL WALL-MOUNTED SWITCHES, CONTROLS, RECEPTACLES, OUTLETS, ETC. AT LEAST 6 INCHES FROM WALL CORNERS.

G. CONCEALMENTS: CONCEAL ALL CONDUIT DROPS AND RISES WITHIN WALLS, AND PROVIDE FLUSH-MOUNTED WALL OUTLET BOXES UNLESS OTHERWISE INDICATED.

H. DOCUMENTS OF OTHER TRADES: REVIEW DOCUMENTS OF OTHER TRADES, INCLUDING ARCHITECTURAL, PRIOR TO SUBMITTING A BID. PROVIDE ELECTRICAL WORK FOR EQUIPMENT, DEVICES, ETC. OF OTHER TRADES AS REQUIRED TO RENDER THEM FULLY OPERATIONAL. REFER TO ARCHITECTURAL ELEVATIONS FOR INTENDED LOCATIONS AND MOUNTING HEIGHTS FOR EQUIPMENT AND OUTLETS, ETC. PRIOR TO COMMENCING WITH ANY RELATED ROUGH-IN WORK.

I. SCHEMATIC REPRESENTATIONS: CIRCUITING WORK SHOWN ON DRAWINGS IS FOR SCHEMATIC GENERAL GRAPHIC REPRESENTATION ONLY. DETERMINE SPECIFICS IN FIELD (POINT-TO-POINT ROUTING, HOME-RUN LOCATIONS, METHODS OF CONCEALMENT, ETC.). LOCATIONS AND ROUTING INDICATED ON PLANS ARE SCHEMATIC AND DIAGRAMMATIC IN NATURE. LAYOUT AND INSTALL ALL ELECTRICAL WORK IN STRICT COMPLIANCE WITH CHAPTER 1, PART II, ARTICLE 110.26 OF THE LATEST ADOPTED EDITION OF THE NATIONAL ELECTRICAL CODE (NFPA 70).

J. HOME-RUN DESIGNATIONS: HOME-RUN DESIGNATIONS INDICATED ON PLANS ARE SCHEMATIC DESIGNATIONS ONLY. DETERMINE EXACT CIRCUIT ASSIGNMENTS IN FIELD BASED ON FIELD CONDITIONS. PROVIDE COLOR-CODED CONDUCTOR INSULATION ACCORDINGLY, CODED PROPERLY DEPENDING ON SYSTEM, PHASE, NEUTRAL, ETC. PROVIDE EQUIPMENT AND PANELBOARD SCHEDULES THAT ACCURATELY INDICATE INSTALLED CONDITIONS.

K. LOCAL DISCONNECTS AND CONTROLS AT EQUIPMENT: LOCAL DISCONNECTS AND LOCAL CONTROLS SHOWN AT OR ON EQUIPMENT IN PLAN-VIEW ARE SHOWN FOR SCHEMATIC ASSOCIATIONS ONLY. AVOID INSTALLING DISCONNECTS OR CONTROLS ON EQUIPMENT ENCLOSURES. INSTALL ON ADJACENT WALLS OR BUILDING STRUCTURE, OR PROVIDE FIELD-FABRICATED UNISTRUT OR EQUIVALENT ASSEMBLIES AS NEEDED. PROVIDE FIELD COORDINATION WITH SITE CONDITIONS AND OTHER TRADES, AND PROVIDE ALL RELATED WORK IN STRICT COMPLIANCE WITH NFPA 70, INCLUDING ARTICLE 110.26. PROVIDE A PERMANENT LABEL ON LOCAL DISCONNECTS NOTING THE EQUIPMENT IT SERVES AND THE PANEL AND CIRCUIT NUMBER FEEDING THE EQUIPMENT PER NFPA 70, ARTICLE 110.22(A).

L. EQUIPMENT & LOAD COORDINATION: REFER TO AND COORDINATE WITH POWER FLOOR PLANS, EQUIPMENT SCHEDULES (INCLUDING EQUIPMENT COORDINATION SCHEDULES), DRAWINGS OF ALL TRADES, ALL DIVISIONS AND SECTIONS OF SPECIFICATIONS AND INSTALLERS OF ALL TRADES. BASED ON ACTUAL EQUIPMENT BEING PROVIDED, DETERMINE AND PROVIDE APPROPRIATE BREAKERS, FUSES, CONDUCTORS, CONTROLS, POWER DISTRIBUTION EQUIPMENT, ETC. PERFORM THESE SERVICES PRIOR TO FURNISHING POWER DISTRIBUTION EQUIPMENT SUBMITTALS.

M. EXTERIOR ELECTRICAL WORK AND WORK SUBJECT TO MOISTURE: EXTERIOR ELECTRICAL WORK SHALL BE WEATHERPROOF AND WATER-TIGHT, AND SHALL BE RUST-RESISTANT. PROVIDE XHHW-2 CONDUCTORS FOR ALL APPLICATIONS THAT ARE BELOW GRADE OR SUBJECT TO MOISTURE. PROVIDE MINIMUM NEMA 3R ENCLOSURES FOR ALL OUTDOOR EQUIPMENT AND ALL INDOOR EQUIPMENT THAT IS SUBJECT TO MOISTURE. PROVIDE NEMA 1 ENCLOSURES FOR ALL OTHER INDOOR EQUIPMENT.

N. EQUIPMENT GROUNDING CONDUCTORS: PROVIDE EQUIPMENT GROUNDING CONDUCTORS IN STRICT COMPLIANCE WITH THE LATEST ADOPTED EDITION OF THE NATIONAL ELECTRICAL CODE (NFPA 70), INCLUDING ARTICLE 250 AND TABLE 250.122. THESE CONDUCTORS MAY OR MAY NOT BE INDICATED ON SINGLE-LINE DIAGRAMS OR ELSEWHERE, BUT SHALL BE PROVIDED UNDER BASE BID NEVERTHELESS.

O. OVERHEAD WORK: HOLD ALL NEW OVERHEAD ELECTRICAL WORK AS TIGHTLY AS POSSIBLE TO THE BOTTOM OF THE OVERHEAD STRUCTURE. DO NOT INSTALL ANY ELECTRICAL WORK WITHIN SIX INCHES OF ROOF DECKING.

P. COORDINATION DRAWINGS: LAYOUT ALL PROPOSED RACEWAY ROUTING, ELEVATIONS, INSTALLATION METHODS, ETC. ON COORDINATION DRAWINGS AND COORDINATE ALL PROPOSED RACEWAY ROUTING WITH ALL AFFECTED TRADES PRIOR TO COMMENCING WITH WORK. IN ADDITION, REVIEW THE INFORMATION WITH ARCHITECT, ENGINEER AND OWNER FOR ALL AREAS WHERE THE RACEWAYS WILL BE VISIBLE AFTER COMPLETION OF CONSTRUCTION.

Q. JUNCTION AND PULL BOXES: LOCATE JUNCTION AND PULL BOXES SO THAT THEY REMAIN ACCESSIBLE AFTER ALL CONSTRUCTION WORK IS COMPLETE. COORDINATE ALL WORK WITH ALL OTHER TRADES PRIOR TO COMMENCEMENT OF THE WORK. LOCATE BOXES IN A MANNER THAT AVOIDS HAVING TO USE ACCESS PANELS. IF ACCESS PANELS ARE INEVITABLE, PROVIDE THEM RATED TO MEET OR EXCEED THE FIRE AND/OR SMOKE RATINGS OF THE RESPECTIVE CEILING OR WALL, AND OBTAIN APPROVAL OF DESIGN PROFESSIONALS FOR EACH LOCATION..

R. CONDUCTOR TERMINATIONS: IN CASES WHERE CONDUCTOR SIZES ARE TOO LARGE TO FIT INTO LUGS/TERMINALS, PROVIDE APPROPRIATE FACTORY LUG KITS FOR AFFECTED EQUIPMENT IF AVAILABLE. ELSEWHERE, PROVIDE INSULATED BUTT-SPLICES OR EQUIVALENT METHOD, WITH TAILS SIZED TO FIT LUGS/TERMINALS. PROVIDE SPLICES IN SEPARATE BOXES IF REQUIRED BASED ON FIELD CONDITIONS, BOX SIZE LIMITATIONS, ETC. CONCEAL BOXES IN ACCESSIBLE OVERHEAD JOIST SPACES IN FINISHED REGULARLY OCCUPIED AREAS.

S. TYPE MC, AC, NM, SE CABLE: WHERE MORE THAN TWO TYPE MC, AC, NM, OR SE CABLES CONTAINING TWO OR MORE CURRENT CARRYING CONDUCTORS IN EACH CABLE ARE INSTALLED IN CONTACT WITH THERMAL INSULATION, CAULK, OR SEALING FOAM MAINTAIN SPACING BETWEEN CABLES.

FIRE ALARM LEGEND

SYMBOL	DESCRIPTION
FIRE ALARM DEVICES	
F	FIRE ALARM SYSTEM MANUAL PULL STATION
S	FIRE ALARM DUCT SMOKE DETECTOR AND SAMPLING TUBE
S	FIRE ALARM SMOKE DETECTOR - CEILING MOUNTED - PHOTOELECTRIC
cd	FIRE ALARM SYSTEM CEILING / OVERHEAD MOUNTED STROBE-ONLY DEVICE (PROVIDE CANDELA (cd) RATING FOR STROBE AS INDICATED ON DRAWINGS)
cd	FIRE ALARM SYSTEM HORN / STROBE DEVICE (PROVIDE CANDELA (cd) RATING FOR STROBE AS INDICATED ON DRAWINGS)
cd C	FIRE ALARM SYSTEM CEILING / OVERHEAD MOUNTED HORN / STROBE DEVICE (PROVIDE CANDELA (cd) RATING FOR STROBE AS INDICATED ON DRAWINGS)
RTS	FIRE ALARM SYSTEM KEYED TEST SWITCH AND ANNUNCIATOR
XXXX XXXX	FIRE ALARM PANELS (DIMENSIONS MAY VARY, FLUSH OR SURFACE MOUNTED AS INDICATED) **FACP** - FIRE ALARM CONTROL PANEL **NAC** - NOTIFICATION BOOSTER PANEL **EVAC** - VOICE EVACUATION PANEL **SCP** - SMOKE CONTROL PANEL **SAP** - SPRINKLER MONITOR PANEL **FAA** - FIRE ALARM REMOTE ANNUNCIATOR **PRE** - PRE-ACTION SYSTEM CONTROL PANEL **FATC** - FIRE ALARM TERMINAL CABINET

ELECTRIC DESIGN CRITERIA

APPLICABLE BUILDING CODES

2018 PENNSYLVANIA BUILDING CODE (BASED ON THE INTERNATIONAL BUILDING CODE)
2017 NFPA 70 - NATIONAL ELECTRICAL CODE (NEC)
2016 NFPA 72 - FIRE ALARM CODE
2016 ASHRAE 90.1

TESTING/COMMISSIONING FOR LIGHTING CONTROLS

LIGHTING CONTROL DEVICES AND SYSTEMS SHALL BE TESTED TO ENSURE THE HARDWARE AND SOFTWARE IS CALIBRATED, PROGRAMMED, AND IN PROPER WORKING ORDER. INSTALLING CONTRACTOR SHALL BE RESPONSIBLE FOR ALL REQUIRED INSTALLATION CERTIFICATES AND SHALL PROVIDE MANUALS FOR LIGHTING CONTROL DEVICES TO OWNER PRIOR TO PROJECT CLOSE-OUT. INSTALLING CONTRACTOR SHALL BE RESPONSIBLE FOR CONTRACTING WITH APPROPRIATE PARTIES TO ARRANGE FOR TESTING/COMMISSIONING OF THE LIGHTING CONTROL SYSTEMS AND SHALL BE RESPONSIBLE FOR ENSURING ALL REQUIRED FUNCTIONAL TESTING FORMS ARE COMPLETED AND SUBMITTED TO THE OWNER AND LOCAL AHJ PRIOR TO PROJECT CLOSE-OUT.

HOSPITAL GRADE RECEPTACLES

PROVIDE HOSPITAL GRADE RECEPTACLES FOR ALL RECEPTACLES IN EXAM AND TREATMENT ROOMS.

TAMPER RESISTANT RECEPTACLES

PROVIDE TAMPER RESISTANT RECEPTACLES IN THE FOLLOWING TYPES OF BUILDINGS, ROOMS, AREAS, ETC. AS APPLICABLE:
- BUSINESS OFFICES, CORRIDORS, WAITING ROOMS AND THE LIKE IN CLINICS, MEDICAL AND DENTAL OFFICES AND OUTPATIENT FACILITIES.
- PATIENT CARE AREAS.

ELECTRIC CONDUIT AND WIRE MATERIAL SCHEDULE

MC - METAL CLAD CABLE
MI - MINERAL INSULATED CABLE
HMC - HEALTHCARE METAL CLAD CABLE
USE - UNDERGROUND SERVICE ENTRANCE CABLE
SE - SERVICE ENTRANCE CABLE
UF - UNDERGROUND FEEDER
NM - NON-METALLIC SHEATHED CABLE
RMC - RIGID METAL CONDUIT
RNC - RIGID NON-METALLIC CONDUIT
RTRC - REINFORCED THERMOSETTING RESIN CONDUIT
LIM - LINE ISOLATION MONITOR

ARC - ALUMINUM RIGID CONDUIT
EMT - ELECTRIC METALLIC TUBING
ENT - ELECTRIC NON-METALLIC TUBING
FMC - FLEXIBLE METALLIC CONDUIT
GRC - GALVANIZED RIGID STEEL CONDUIT
HDPE - HIGH DENSITY POLYETHYLENE CONDUIT
IMC - INTERMEDIATE METAL CONDUIT
LFMC - LIQUID-TIGHT FLEXIBILE METALLIC CONDUIT
LFNC - LIQUID-TIGHT FLEXIBLE NON-METALLIC CONDUIT
SCH 40 PVC - SCHEDULE 40 POLYVINYL CHLORIDE CONDUIT
SCH 80 PVC - SCHEDULE 80 POLYVINYL CHLORIDE CONDUIT

CONDUIT APPLICATION	CONDUCTOR TYPE	RACEWAY TYPE	RACEWAY AND CONDUCTOR NOTES
---FIRE ALARM---			
EXISTING HOLLOW PARTITIONS	NON-PLENUM RATED	EMT	
CONCEALED	NON-PLENUM RATED	EMT	
EXPOSED	NON-PLENUM RATED	EMT	
CONCEALED, ABOVE INACCESSIBLE CEILINGS	NON-PLENUM RATED	EMT	
---POWER - INDOOR---			
EXISTING HOLLOW PARTITIONS	THHN	EMT	
CONCEALED	THHN	EMT	
VERTICAL RISERS FROM BELOW GRADE INCLUDING ELBOW	XHHW-2	RMC (GRC)	
CONNECTION TO SYSTEMS FURNITURE	THHN	LFMC	
CONNECTION TO VIBRATING EQUIPMENT, 72" MAX	THHN	LFMC	
EXPOSED	THHN	EMT	
UNDERGROUND	XHHW-2	RNC (SCH 40 PVC)	
---POWER - OUTDOOR---			
EXPOSED	XHHW-2	RMC (GRC)	
CONCEALED	XHHW-2	EMT	
UNDERGROUND	XHHW-2	RNC (SCH 40 PVC)	
CONNECTION TO VIBRATING EQUIPMENT, 72" MAX	XHHW-2	LFMC	
EXPOSED TO DIRECT SUNLIGHT, ROOF	XHHW-2	RMC (GRC)	
---TECHNOLOGY---			
EXISTING HOLLOW PARTITIONS	NON-PLENUM RATED	EMT	
CONCEALED, ABOVE ACCESSIBLE CEILINGS	PLENUM RATED	J-HOOKS	

GROUNDING OF RECEPTACLES AND FIXED ELECTRICAL EQUIPMENT IN PATIENT CARE SPACES

WIRING METHODS AND MATERIALS IN PATIENT CARE SPACES MUST COMPLY WITH NEC SECTION 517, HEALTH CARE FACILITIES.

A. ALL BRANCH CIRCUITS SERVING PATIENT CARE SPACES SHALL BE PROVIDED WITH AN EFFECTIVE GROUND-FAULT CURRENT PATH BY INSTALLATION IN A METAL RACEWAY SYSTEM OR A CABLE HAVING A METALLIC ARMOR OR SHEATH ASSEMBLY. THE METAL RACEWAY SYSTEM, METALLIC CABLE ARMOR, OR SHEATH ASSEMBLY SHALL I TSELF QUALIFY AS AN EQUIPMENT GROUNDING CONDUCTOR IN ACCORDANCE WITH 250.118.

B. THE FOLLOWING SHALL BE DIRECTLY CONNECTED TO AN INSULATED COPPER EQUIPMENT GROUNDING CONDUCTOR THAT IS CLEARLY IDENTIFIED ALONG ITS ENTIRE LENGTH BY GREEN INSULATION AND INSTALLED WITH THE BRANCH CIRCUIT CONDUCTORS IN THE WIRING METHODS AS PROVIDED IN 517.13(A):

1. THE GROUNDING TERMINALS OF ALL RECEPTACLES OTHER THAN ISOLATED GROUND RECEPTACLES

2. METAL OUTLET BOXES, METAL DEVICE BOXES, OR METAL ENCLOSURES

3. ALL NON-CURRENT-CARRYING CONDUCTIVE SURFACES OF FIXED ELECTRICAL EQUIPMENT LIKELY TO BECOME ENERGIZED THAT ARE SUBJECT TO PERSONAL CONTACT, OPERATING AT OVER 100 VOLTS

OSH ELECTRIC LUMINAIRE SCHEDULE

GENERAL NOTES:
A. REFER TO DRAWINGS FOR MOUNTING TYPE, NUMBER OF FACES AND ARROWS OF EXIT SIGNS. VERIFY IN FIELD PRIOR TO INSTALLATION.
B. VERIFY COMPATIBILITY WITH VOLTAGE, CONTROLS, ETC. FOR ALL LUMINAIRE COMPONENTS
C. COORDINATE EACH LUMINAIRE LOCATION WITH THE ARCHITECTURAL REFLECTED CEILING PLANS, CEILING INSTALLERS, ETC. AND PROVIDE APPROPRIATE MOUNTING SYSTEM REQUIRED FOR EACH LUMINAIRE. ALSO, PROVIDE PLASTER FRAMES, WALL BRACKETS, SUPPORTS, OR OTHER APPURTENANCES AS REQUIRED FOR PROPER AND COMPLETE INSTALLATIONS.
D. WEAR CLEAN WHITE COTTON GLOVES WHEN HANDLING EXPOSED REFLECTIVE LUMINAIRE SURFACES. REMOVE PLASTIC SHIPPING BAGS ONLY AFTER INTERIOR WORK IS COMPLETE, AND CLEAN ALL SURFACES WITH CLEAN DRY CHEESECLOTH.
E. MOUNTING HEIGHTS INDICATED ARE TO THE BOTTOM OF THE LUMINAIRE, UNLESS OTHERWISE NOTED.
F. PRODUCTS: PROVIDE PRODUCTS INDICATED ON DRAWINGS AND SCHEDULES. WHERE MULTIPLE MANUFACTURER SERIES/MODEL NUMBERS ARE LISTED FOR A SINGLE LUMINAIRE, PROVIDE ONE OF THOSE LISTED. WHERE A SPECIFIC MANUFACTURER SERIES/MODEL NUMBER IS LISTED AS BASIS-OF-DESIGN, AND WHERE IT IS STATED THAT EQUIVALENTS WILL BE CONSIDERED, ANY PROPOSED NON-LISTED LUMINAIRES ARE SUBJECT TO REVIEW BY DESIGN PROFESSIONAL(S), SUBMITTALS FOR WHICH SHALL BE FURNISHED AT LEAST (10) DAYS PRIOR TO BID DUE DATE OR THEY WILL NOT BE CONSIDERED. THESE PRE-BID SUBMITTALS SHALL CLEARLY STATE EXACTLY WHAT IS BEING PROPOSED AND SHALL DEMONSTRATE COMPLIANT EQUIVALENCY. SIMILAR REQUESTS FOR PROPOSED SUBSTITUTIONS MAY BE MADE ONLY AFTER BIDS ARE RECEIVED, AND ONLY IF OWNER CHOOSES TO CONSIDER SUBSTITUTION REQUESTS. DESIGN PROFESSIONAL(S) AND OWNER RESERVE THE RIGHT TO REJECT ALL PRODUCTS THAT ARE NOT DEEMED TO BE FULLY EQUIVALENT TO THE BASIS-OF-DESIGN LISTING(S). SUBMIT ALL REQUESTS AND QUESTIONS THROUGH THE FORMALLY-ESTABLISHED BIDDING PROCESS, NOT DIRECTLY TO ENGINEER.

TYPE	DESCRIPTION	MANUFACTURER / SERIES	HOUSING / MOUNTING	LAMP QTY	LAMP TYPE	LAMP BASE	BALLAST / DRIVER QTY	BALLAST / DRIVER	FINISH	COMMENTS	FIXTURE LOAD	VOLTAGE
ELU	WALL MOUNTED EXTERIOR NORMAL AND EMERGENCY LIGHT	ISOLITE OWL-EM-BK-MB-HX	WALL	2	LED, WITH UNIT		0	NO BALLAST	BLACK	PROVIDE WITH 90MIN EMERGENCY BATTERY BACKUP; MOUNT 6" ABOVE DOOR FRAM	6 VA	120 V
EX	EXIT SIGN	ISOLITE ELT-EM-R-1C-FT-WH-MRC	UNIVERSAL, REFER TO PLAN	1	1W LED, WITH SIGN		0	NO BALLAST	WHITE	EXIT SIGNAGE COLOR TO BE BASED ON OWNER PREFERENCE OR EXISTING CONDITIONS, PROVIDE WITH 90 MINUTE EMERGENCY BATTERY BACK-UP	1 VA	120 V
F1	2X4 LAY-IN	LITHONIA #2BLT4-60L-ADSM-EZ1-LP835	CEILING	1	LED WITH UNIT		1	DRIVER	WHITE		48 VA	120 V
F1E	2X4 LAY-IN	LITHONIA #2BLT4-60L-ADSM-EZ1-LP835-EL14L	CEILING	1	LED WITH UNIT		1	DRIVER	WHITE	PROVIDE WITH 90MIN EMERGENCY BATTERY BACKUP	48 VA	120 V
F2	4" RECESSED DOWNLIGHT	GOTHAM EV04-35-15-AR-MD-LSS-MVOLT-EZ1	SUSPENDED	1	LED WITH UNIT		1	DRIVER	WHITE		14 VA	120 V
F2E	4" RECESSED DOWNLIGHT	GOTHAM EV04-35-15-AR-MD-LSS-MVOLT-EZ1-ELRSD	UNIVERSAL, REFER TO PLAN	1	LED WITH UNIT		1	DRIVER	WHITE	PROVIDE WITH 90MIN EMERGENCY BATTERY BACKUP	14 VA	120 V
LF	STRIP LIGHT	LITHONIA ZL1N-L48-SMR-3000LM-FST-MVOLT-35K-80CRI-WH	SUSPENDED & WALL	1	LED WITH UNIT		1	DRIVER	WHITE	PROVIDE HARDWARE AS NEEDED FOR MOUNTING.	15 VA	120 V
LFE	STRIP LIGHT	LITHONIA ZL1N-L48-SMR-3000LM-FST-MVOLT-35K-80CRI-E7W-WH	SUSPENDED & WALL	1	LED WITH UNIT		1	DRIVER	WHITE	PROVIDE WITH 90MIN EMERGENCY BATTERY BACKUP; PROVIDE HARDWARE AS NEEDED FOR MOUNTING.	15 VA	120 V

KLH ENGINEERS
MECHANICAL/ELECTRICAL ENGINEERS
WWW.KLHENGRS.COM
LEXINGTON, KENTUCKY
LOUISVILLE, KENTUCKY
COLUMBUS, OHIO
NEW YORK, NEW YORK
KLH #: 25588
KOHRS LONNEMANN HEIL ENGINEERS, INC.
1538 ALEXANDRIA PIKE, SUITE 11
FT. THOMAS, KENTUCKY 41075
800-354-9783 859-442-8050
859-442-8058 FAX

Project

Oak St. Health
520 PENN AVENUE,
WILKINSBURG, PA

Architect

MOODY·NOLAN
300 Spruce Street
Suite 300
Columbus, Ohio 43215
Phone: (614) 461-4664
Fax: (614) 280-8881
www.moodynolan.com

Seal:

COMMONWEALTH OF PENNSYLVANIA
REGISTERED PROFESSIONAL
JAMES S. TAVERNELLI
ENGINEER
PE-082782
9/27/2023

Versions

No.	Date	Description

Sheet Title

ELECTRIC COVER SHEET

Issue Date: 09/05/2023

Drawn: KLH

Project No.: 25588

Sheet No.

E-001

LIGHTING CONTROL SEQUENCE SCHEDULE

Space: Name	Space: Number	AUTO OFF	OCC SENSOR OFF	DAYLIGHTING	DIMMING	MANUAL OR AUTO ON
COATS	101	OCC. SENSOR	5 MIN	NO	NO	MANUAL ON
FUTURE PHARMACY	102	OCC. SENSOR	5 MIN	NO	NO	MANUAL ON
EXAM 6	103	OCC. SENSOR	20 MIN	NO	YES	MANUAL ON
EXAM 7	104	OCC. SENSOR	20 MIN	NO	YES	MANUAL ON
ELECTRICAL/FIRE	105	N/A	N/A	NO	NO	MANUAL ON
JANITOR	106	OCC. SENSOR	5 MIN	NO	NO	AUTO ON
BREAK ROOM	107	OCC. SENSOR	20 MIN	NO	YES	MANUAL ON
EXAM 3	108	OCC. SENSOR	20 MIN	NO	YES	MANUAL ON
EXAM 2	109	OCC. SENSOR	20 MIN	NO	YES	MANUAL ON
EXAM 11	110	OCC. SENSOR	20 MIN	NO	YES	MANUAL ON
EXAM 10	111	OCC. SENSOR	20 MIN	NO	YES	MANUAL ON
OFFICE 3	112	OCC. SENSOR	20 MIN	NO	YES	MANUAL ON
MEN'S RESTROOM	113	OCC. SENSOR	5 MIN	NO	NO	AUTO ON
WOMEN'S RESTROOM	114	OCC. SENSOR	5 MIN	NO	NO	AUTO ON
EXAM 12	115	OCC. SENSOR	20 MIN	NO	YES	MANUAL ON
BARIATRIC EXAM ROOM 14	116	OCC. SENSOR	20 MIN	NO	YES	MANUAL ON
OFFICE 1	117	OCC. SENSOR	20 MIN	NO	YES	MANUAL ON
OFFICE 2	118	OCC. SENSOR	20 MIN	NO	YES	MANUAL ON

LIGHTING CONTROL SEQUENCE SCHEDULE

Space: Name	Space: Number	AUTO OFF	OCC SENSOR OFF	DAYLIGHTING	DIMMING	MANUAL OR AUTO ON
EXAM 1	119	OCC. SENSOR	20 MIN	NO	YES	MANUAL ON
CLINIC RESTROOM	120	OCC. SENSOR	5 MIN	NO	NO	AUTO ON
LAB	121	OCC. SENSOR	20 MIN	NO	YES	MANUAL ON
OUTREACH STORAGE	122	OCC. SENSOR	5 MIN	NO	NO	MANUAL ON
CALL ROOM	123	OCC. SENSOR	20 MIN	NO	YES	MANUAL ON
EXAM 13	124	OCC. SENSOR	20 MIN	NO	YES	MANUAL ON
IT	125	N/A	N/A	NO	NO	MANUAL ON
EXAM 5	126	OCC. SENSOR	20 MIN	NO	YES	MANUAL ON
EXAM 4	127	OCC. SENSOR	20 MIN	NO	YES	MANUAL ON
CONSULT	128	OCC. SENSOR	20 MIN	NO	YES	MANUAL ON
EXAM 8	129	OCC. SENSOR	20 MIN	NO	YES	MANUAL ON
SUPPLY STORAGE	132	OCC. SENSOR	5 MIN	NO	NO	MANUAL ON
EMPLOYEE RESTROOM	133	OCC. SENSOR	5 MIN	NO	NO	AUTO ON
RW	134	OCC. SENSOR	5 MIN	NO	NO	MANUAL ON

LIGHTING CONTROL SEQUENCE SCHEDULE

Space: Name	Space: Number	AUTO OFF	OCC SENSOR OFF	DAYLIGHTING	DIMMING	MANUAL OR AUTO ON
ENROLLMENT	135	OCC. SENSOR	20 MIN	NO	YES	MANUAL ON
OUTREACH	136	OCC. SENSOR	20 MIN	NO	YES	MANUAL ON
CONFERENCE	137	OCC. SENSOR	20 MIN	NO	YES	MANUAL ON
RECEPTION	138	OCC. SENSOR	20 MIN	NO	YES	MANUAL ON
EXISTING VESTIBULE	139	OCC. SENSOR	20 MIN	NO	YES	MANUAL ON
HALLWAY	140	OCC. SENSOR	20 MIN	NO	NO	MANUAL ON
AISLE 4	141	OCC. SENSOR	20 MIN	NO	NO	MANUAL ON
HALLWAY	142	OCC. SENSOR	20 MIN	NO	NO	MANUAL ON
AISLE 3	143	OCC. SENSOR	20 MIN	NO	NO	MANUAL ON
AISLE 2	144	OCC. SENSOR	20 MIN	NO	NO	MANUAL ON
AISLE 1	145	OCC. SENSOR	20 MIN	NO	NO	MANUAL ON
CARE TEAM 1	146	OCC. SENSOR	30 MIN	NO	YES	MANUAL ON
MEDICAL STORAGE	147	OCC. SENSOR	5 MIN	NO	NO	MANUAL ON
CARE TEAM 3	148	OCC. SENSOR	20 MIN	NO	YES	MANUAL ON
CARE TEAM 2	149	OCC. SENSOR	20 MIN	NO	YES	MANUAL ON
HALLWAY	150	OCC. SENSOR	20 MIN	NO	NO	MANUAL ON
COMMUNITY ROOM	151	OCC. SENSOR	20 MIN	NO	YES	MANUAL ON
COATS	152	OCC. SENSOR	5 MIN	NO	NO	MANUAL ON

EXTERIOR AND SITE LIGHTING SCOPE

A. EXTERIOR LIGHTING: EC TO RETAIN EXISTING EXTERIOR LIGHTING AND CONTROLS FOR USE WITH NEW OSH FACILITY. EC TO PROVIDE SELECTIVE DEMOLITION SERVICES AS NEEDED. EXISTING LIGHTING CONTROLS TO BE PROGRAMMED FOR USE WITH NEW STORE HOURS. FIELD VERIFY EXACT SCOPE OF WORK PRIOR TO BID.
B. SITE LIGHTING: EXISTING SITE LIGHTING TO REMAIN. EXISTING CONDUITS/CIRCUITS TO BE RETAINED FOR USE WITH NEW OSH FACILITY. EC TO PROVIDE SELECTIVE DEMOLITION SERVICES AS NEEDED. EXISTING LIGHTING CONTROLS TO BE PROGRAMMED FOR USE WITH NEW STORE HOURS. FIELD VERIFY EXACT SCOPE OF WORK PRIOR TO BID.

KEYED NOTES

E21	COORDINATE EXACT LOCATION OF DEVICE(S) WITH OSH AND THE ARCHITECT IN THE FIELD PRIOR TO ROUGH-IN.
E22	LIGHTING FIXTURES TO BE SUSPENDED 10' AFF.

GENERAL LIGHTING PLAN NOTES

A. EXIT SIGN CONNECTIONS: CONNECT ALL EXIT SIGNAGE AHEAD OF ANY SWITCHING.
B. INDOOR EGRESS LIGHTING: CONNECT ALL INDOOR EGRESS LIGHTING, DESIGNATED "EL", AHEAD OF ANY SWITCHING. UNLESS CONTROL METHODS ARE INDICATED OTHERWISE FOR A GIVEN AREA.
C. BATTERY BACKUP DEVICES: WHERE INDICATED IN DOCUMENTS, PROVIDE UL 924 LISTED BATTERY DEVICES, WHICH AUTOMATICALLY REVERT TO FULL ILLUMINATION FOR THE AFFECTED LUMINAIRES IN THE EVENT OF LOSS OF POWER FROM THE NORMAL POWER SUPPLY CIRCUIT. PROVIDE UNSWITCHED "HOT" TO SUCH COMPONENTS TO PROVIDE CONTINUOUS POWER EVEN IF LUMINAIRE IS TURNED OFF USING NORMAL LIGHTING CONTROLS.
D. TRANSFER/RELAY-CONTROL DEVICES: WHERE INDICATED IN DOCUMENTS, PROVIDE TRANSFER/RELAY-CONTROL DEVICES, WHICH AUTOMATICALLY REVERT TO FULL ILLUMINATION FOR THE AFFECTED LUMINAIRES IN THE EVENT OF LOSS OF POWER FROM THE NORMAL POWER SUPPLY CIRCUIT. PROVIDE UNSWITCHED "HOT" TO SUCH COMPONENTS, TO PROVIDE CONTINUOUS POWER EVEN IF LUMINAIRE IS TURNED OFF USING NORMAL LIGHTING CONTROLS.

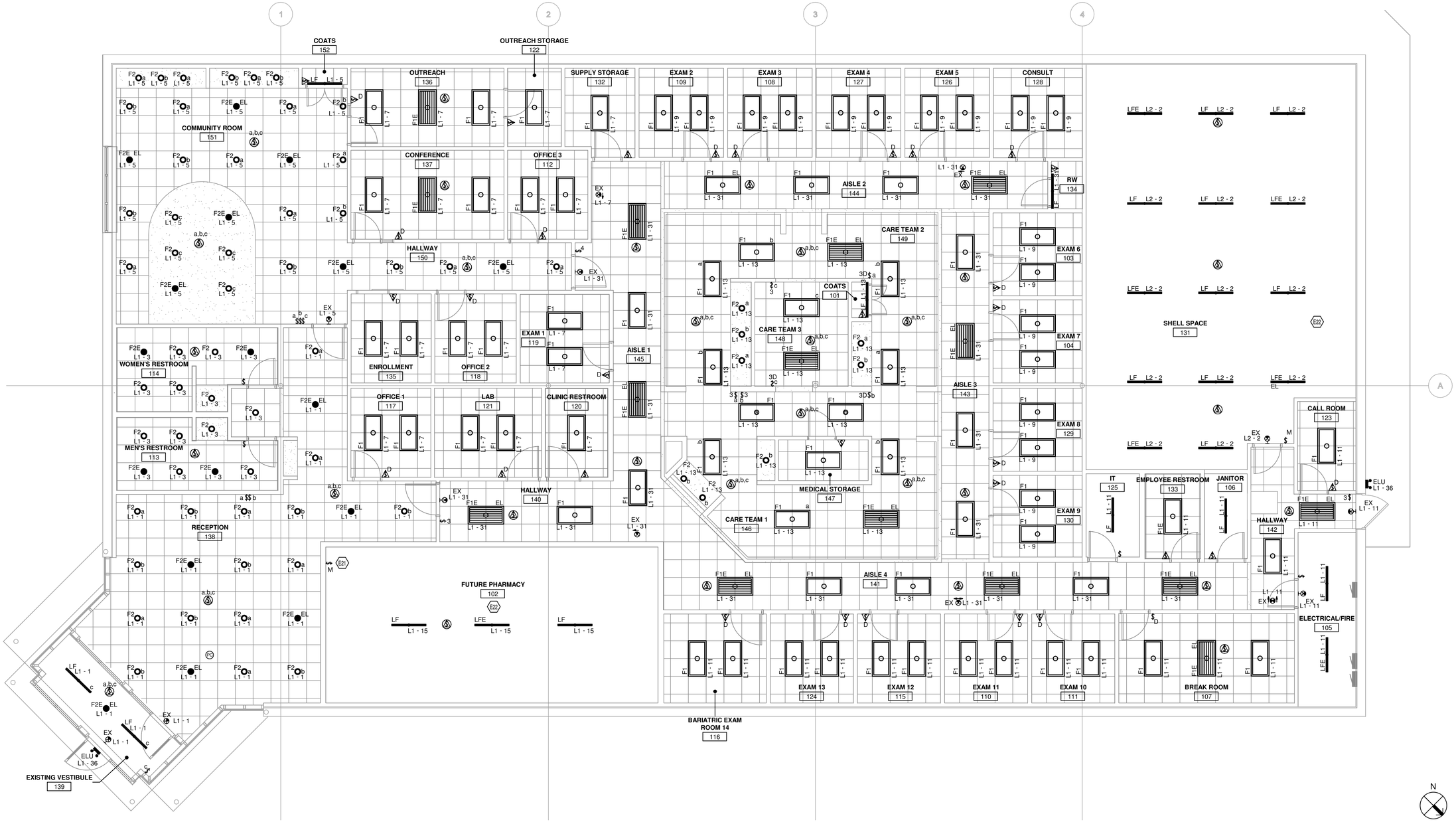

1 ELECTRIC LIGHTING LEVEL 1 PLAN
3/16" = 1'-0"

MECHANICAL/ELECTRICAL ENGINEERS
WWW.KLHENGRS.COM
LEXINGTON, KENTUCKY
LOUISVILLE, KENTUCKY
CINCINNATI, OHIO
NEW YORK, NEW YORK
KLH #: 25588

KLH ENGINEERS
KOHRS LONNEMANN HEIL ENGINEERS, INC.
1538 ALEXANDRIA PIKE, SUITE 11
FT. THOMAS, KENTUCKY 41075
859-442-8052 859-442-8060
859-442-8058 FAX

Project

Oak St. Health
520 PENN AVENUE,
WILKINSBURG, PA

Architect

MOODY•NOLAN
300 Spruce Street Phone: (614) 461-4664
Suite 300 Fax: (614) 280-8881
Columbus, Ohio 43215 www.moodynolan.com

Seal:

COMMONWEALTH OF PENNSYLVANIA
REGISTERED PROFESSIONAL
JAMES S. TAVERNELLI
ENGINEER
PE-082782
9/27/2023

Versions

No.	Date	Description

Sheet Title

ELECTRIC LIGHTING LEVEL 1 PLAN

Issue Date: 09/05/2023

Drawn: KLH
Project No. 25588

Sheet No.

EL101

OSH ELECTRIC FLOOR OUTLET DEVICE SCHEDULE

FLOOR OUTLET DEVICE NOTES:
1. LISTING AND LABELING: FLOOR BOXES SHALL BE LISTED AND LABELED AS WELL AS MARKED FOR INTENDED LOCATION AND APPLICATION.
2. COMPLY WITH UL 514 AND NFPA 70 SCRUB WATER EXCLUSION REQUIREMENTS. MAINTAIN SMOKE AND FIRE RATINGS OF ALL FLOORS AND CEILINGS.
3. PROVIDE BARRIERS TO SEPARATE POWER FROM COMMUNICATIONS.
4. MATCH THE SURROUNDING FLOORING MATERIAL WHEREVER POSSIBLE, AND COORDINATE FINISHED SURFACE MATERIALS WITH ARCHITECTURAL DRAWINGS.
5. PROVIDE MINIMUM 1" CONDUIT TO ABOVE NEAREST ACCESSIBLE CEILING FOR EACH GANG IDENTIFIED FOR TECHNOLOGY UNLESS OTHERWISE NOTED.

ACCEPTABLE MANUFACTURERS:
- FSR
- WIREMOLD / LEGRAND
- HUBBELL INCORPORATED

TYPE	BASIS OF DESIGN	FLOOR BOX TYPE	FLOOR CONSTRUCTION	FLOOR BOX MATERIAL	COVER MATERIAL	ACTIVATION	POWER	TECHNOLOGY	COMMENTS
A	AS SCHEDULED	RECESSED	CONCRETE - SLAB ON GRADE	PLASTIC	COORDINATE WITH ARCH.	FLUSH	QUAD	2-GANG	PROVIDE WITH HDMI CONNECTORS. PROVIDE CABLING FROM FLAT PANEL TV TO FLOOR BOX.

GENERAL POWER PLAN NOTES

A. EQUIPMENT COORDINATION SCHEDULES: REFER TO EQUIPMENT COORDINATION SCHEDULES FOR REQUIREMENTS ASSOCIATED WITH EQUIPMENT CIRCUITING, CONNECTIONS, ANCILLARY DEVICES AND EQUIPMENT, ETC. COORDINATE LOCATIONS AND REQUIREMENTS FOR ALL EQUIPMENT WITH RESPECTIVE EQUIPMENT SUPPLIERS AND INSTALLERS PRIOR TO ORDERING ANY RELATED MATERIALS OR COMMENCING WITH ANY RELATED ROUGH-IN WORK.

B. TECHNOLOGY SYSTEMS: PROVIDE RACEWAY AND PATHWAY SYSTEMS FOR ALL TECHNOLOGY WORK. INCLUDE OUTLET BOXES, CONDUITS, RACEWAYS, J-HOOKS, CABLE TRAY, ETC. AS REQUIRED FOR COMPLETE OPERATIONAL SYSTEMS. COORDINATE ALL RELATED WORK (INCLUDING ASSOCIATED POWER) WITH OWNER (INCLUDING OWNER'S PROJECT MANAGER), FIELD CONDITIONS, FURNITURE INSTALLER(S), TECHNOLOGY INSTALLER(S) AND WORK OF OTHER TRADES AND SUPPLIERS/INSTALLERS AS APPLICABLE. TERMINATE ALL CONDUITS FROM OUTLET BOXES TO NEAREST ACCESSIBLE CEILING CAVITY, OR TO OVERHEAD STRUCTURAL SPACE FOR AREAS WITH NO CEILINGS. PROVIDE CONDUITS WITH SWEEP BENDS, PULL STRINGS, PLASTIC BUSHINGS AND IDENTIFICATION AT OVERHEAD ENDS. PROVIDE BLANK WALL PLATES TO MATCH WIRING DEVICE WALL PLATES.

C. STOREFRONT WINDOWS: INSTALL RECEPTACLE(S) INDICATED ABOVE STOREFRONT WINDOWS WITHIN 18 INCHES OF THE TOP OF STOREFRONT WINDOWS, AND INSTALL COMPLIANT WITH NEC, INCLUDING ARTICLE 210.62.

D. TRIM AND DOOR FINISHES: PROVIDE FACTORY-PAINTED OR FIELD-PAINTED TRIMS AND DOORS TO MATCH WALL FINISH COLOR FOR ALL PANELBOARDS AND SIMILAR EQUIPMENT THAT ARE INSTALLED RECESSED IN FINISHED WALLS. IF FIELD-PAINTED, PAINT ALL SIDES AND EDGES WITH TWO COATS OF PAINT BEFORE INSTALLATION, AND LET DRY BEFORE INSTALLING THEM. ENSURE THAT NO COMPONENTS ARE (DOORS, LATCHES, SCREWS, ETC.) ARE "PAINTED SHUT".

E. SIGNAGE: COORDINATE ALL SIGNAGE REQUIREMENTS WITH OWNER (INCLUDING OWNER'S PROJECT MANAGER), SIGNAGE SUPPLIERS AND INSTALLERS, AND ARCHITECT TO DETERMINE SPECIFICS REGARDING LOCATIONS, POWER, CONTROL, AND OTHER PERTINENT INFORMATION. PROVIDE POWER (ON DEDICATED CIRCUIT(S)) FOR SIGNAGE REQUIRING POWER CONNECTIONS. PROVIDE PHOTOCELL AND TIME-BASED CONTROL, CONFIGURED AS DIRECTED BY OWNER. PROVIDE ALL ELECTRICAL WORK, INCLUDING DISCONNECTING MEANS, COMPLIANT WITH ARTICLE 600 OF NFPA 70. COMPLY WITH LANDLORD REQUIREMENTS WHERE APPLICABLE.

KEYED NOTES

E4	PROVIDE POWER AND CONTROL WIRING, CONNECTIONS, ETC. FOR SIGNAGE. COORDINATE EXACT LOCATION, HEIGHT, AND ELECTRICAL REQUIREMENTS WITH SIGNAGE INSTALLER AND PROVIDE ELECTRICAL WORK ACCORDINGLY. PROVIDE FLUSH-MOUNTED, LOCAL DISCONNECT SWITCH INSTALLED IN A CONCEALED, BUT ACCESSIBLE, LOCATION WITHIN SITE OF THE SIGN. WHERE THIS IS NOT POSSIBLE, PROVIDE LOCK-OUT, TAG-OUT BREAKER IN SOURCE PANELBOARD IN LIEU OF LOCAL DISCONNECT SWITCH AND A LABEL INSIDE THE SIGN ENCLOSURE IDENTIFYING THE BREAKER'S LOCATION PER NEC 600.6(A)(2).
E5	TELEPHONE BOARD AND ASSOCIATED EQUIPMENT TO BE RELOCATED. RETAIN CONDUIT UNDERGROUND ENTRANCE POINT AND PROVIDE NEW OVERHEAD CONDUIT AS NEEDED FOR RELOCATION. FIELD VERIFY SCOPE OF WORK PRIOR TO BID.
E18	DUCTLESS SPLIT SYSTEM INDOOR UNIT FED FROM CONDENSING UNIT ON THE ROOF. CONDENSING UNIT BRANCH CIRCUIT LENGTH TO BE 35' IN LENGTH, MINIMUM.
E19	DATA CABLING FOR (2) DATA PORTS IS TO BE PULLED TO EXAM ROOM AND LEFT ABOVE THE CEILING WITH ENOUGH SLACK TO ADD WALL JACKS AT 18" AFF IN THE FUTURE.
E20	REFER TO MANUFACTURERS INSTALLATION INSTRUCTIONS FOR RECEPTACLE MOUNTING HEIGHTS.
E21	COORDINATE EXACT LOCATION OF DEVICE(S) WITH OSH AND THE ARCHITECT IN THE FIELD PRIOR TO ROUGH-IN.
E23	EXISTING 'L2' PANEL TO BE RELOCATED TO ELECTRICAL ROOM. EC TO MODIFY EXISTING CONDUIT/WIRE AS NEEDED FOR RELOCATION.

DEVICE LAYOUT - BID ONLY

A. **ACTIVE ALARM DRAWINGS:** REFER TO ACTIVE ALARM DRAWINGS FOR REQUIREMENTS ASSOCIATED WITH SECURITY AND LOW VOLTAGE EQUIPMENT CIRCUITING, CONNECTIONS, ANCILLARY DEVICES AND EQUIPMENT, ETC.

B. **FLAT PANEL DISPLAYS:** COORDINATE EXACT LOCATION & ELEVATION OF FLAT PANEL RECEPTACLES PRIOR TO ROUGH-IN. EC TO PROVIDE RECESEED RECEPTACLES FOR ALL RECEPTACLES DENOTED AS 'FP'.

C. **PRINTERS:** RECEPTACLES & DATA FOR PRINTERS TO BE INSTALLED AT 43" AFF. 6" FROM END OF WALL.

D. **SECURITY DEVICES:** REFER TO ACTIVE ALARM DRAWINGS AS APPLICABLE FOR EQUIPMENT WIRING, CONNECTIONS, ANCILLARY DEVICES AND EQUIPMENT, ETC. COORDINATE LOCATIONS AND REQUIREMENTS FOR ALL EQUIPMENT WITH RESPECTIVE EQUIPMENT SUPPLIERS AND INSTALLERS PRIOR TO ORDERING ANY RELATED MATERIALS OR COMMENCING WITH ANY RELATED ROUGH-IN WORK.

E. **DATA DEVICES:** COORDINATE ALL DATA AND VOICE REQUIREMENTS AND DROPS WITH EQUIPMENT VENDOR PRIOR TO ROUGH-IN. EXCLUSIVELY USE CAT5e CABLE THROUGHOUT.

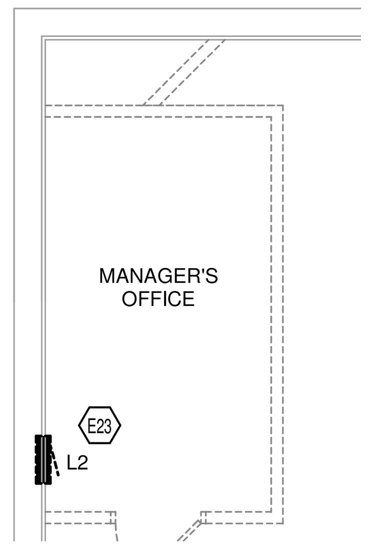

4 ELECTRIC DEMOLITION POWER PLAN
3/16" = 1'-0"

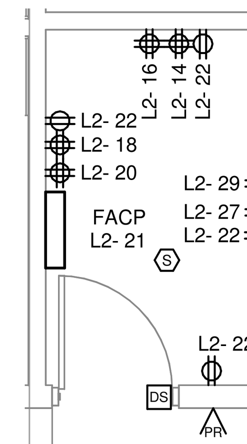

3 ELECTRIC POWER- ENLARGED IT
1/4" = 1'-0"

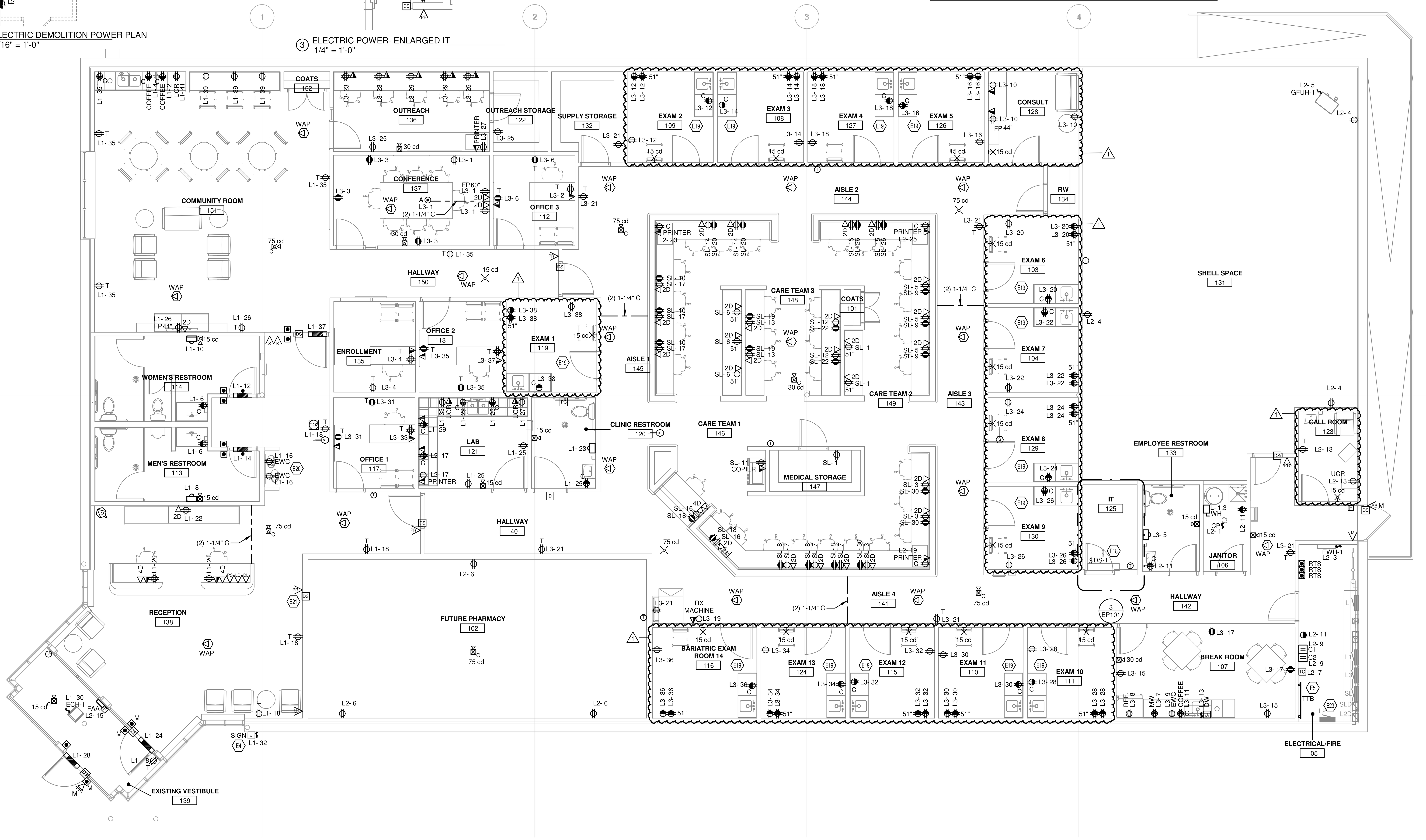

1 ELECTRIC POWER AND FIRE ALARM LEVEL 1 PLAN
3/16" = 1'-0"

KLH ENGINEERS
KOHRS LONNEMANN HEIL ENGINEERS, INC.
1538 ALEXANDRIA PIKE, SUITE 11
FT. THOMAS, KENTUCKY 41075
800-354-9783 859-442-8050
859-442-8058 FAX
MECHANICAL/ELECTRICAL ENGINEERS
WWW.KLHENGRS.COM
LEXINGTON, KENTUCKY
LOUISVILLE, KENTUCKY
COLUMBUS, OHIO
NEW YORK, NEW YORK
KLH #: 25588

Project
Oak St. Health
520 PENN AVENUE,
WILKINSBURG, PA

Architect
MOODY•NOLAN
300 Spruce Street
Suite 300
Columbus, Ohio 43215
Phone: (614) 461-4664
Fax: (614) 280-8881
www.moodynolan.com

Seal:
COMMONWEALTH OF PENNSYLVANIA
REGISTERED PROFESSIONAL ENGINEER
JAMES S. TAVERNELLI
PE-082782
9/27/2023

Versions

No.	Date	Description
1	09.27.23	PERMIT COMMENTS

Sheet Title
ELECTRIC POWER AND FIRE ALARM LEVEL 1 PLAN

Issue Date: 09/05/2023

Drawn: KLH
Project No.: 25588

Sheet No.
EP101

HVAC ELECTRICAL COORDINATION SCHEDULE

ABBREVIATIONS		CONTRACTOR TYPE		MOTOR CONTROL TYPE		CONTROL TYPE		CONTROL TYPE
DC	LOCAL DISCONNECT	EC	ELECTRICAL CONTRACTOR	CS	COMBINATION STARTER	TC	TIMECLOCK	WHERE SHORT CIRCUIT RATING CODE REQUIRED VALUE INDICATES "YES" APPLICABLE EQUIPMENT'S SHORT CIRCUIT RATING SHALL EXCEED THE AVAILABLE FAULT CURRENT VALUE INDICATED.
MC	MOTOR CONTROL (POWER)	EX	EXISTING	MCC	MOTOR CONTROL STARTER	CPT	CONTROL POWER TRANSFORMER	
SD	DUCT SMOKE DETECTOR	FC	FIRE PROTECTION CONTRACTOR	MG	MAGNETIC STARTER OR CONTACT	BAS	BUILDING AUTOMATION SYSTEM	
CN	CONTROLS	GC	GENERAL CONTRACTOR	MS	MANUAL STARTER	LOW	LOW VOLTAGE CONTROLS	
TS	TOGGLE SWITCH	HC	HVAC CONTRACTOR	VFD	VARIABLE FREQUENCY DRIVE	LINE	LINE VOLTAGE CONTROLS	
C/B	H.A.C.R. CIRCUIT BREAKER AT SOURCE PANELBOARD	MFR	MANUFACTURER	MSR	MANUAL STARTER W/ CONTROL RELAY	RLINE	REVERSE ACTING LINE VOLTAGE THERMOSTAT	
FUSE	FUSE AT LOCAL DISCONNECT (VERIFY FIELD RATING)	PC	PLUMBING CONTRACTOR	OV	OVERCURRENT PROTECTION	MAN	MANUAL	
FLA	OPERATING FULL LOAD AMPS	OR	OWNER OR OTHERS			FA	FIRE ALARM	
MCA	MINIMUM CIRCUIT AMPACITY					CO	CARBON MONOXIDE SENSOR	
CP	CORD AND PLUG CONNECTION					INT	INTEGRAL TO EQUIPMENT	
[BLANK]	HARD WIRED (WHEN INDICATED FOR DC TYPE)					ASD	AREA SMOKE DETECTOR	
						DSD	DUCT SMOKE DETECTOR	

CONNECTION MARK	DESCRIPTION	VOLTAGE	PHASE	EMERGENCY	HP	WATTS	HTG KW	FLA	MCA	OCP	FED FROM	DC TYPE	DC FURN	DC INST	DC WIRE	MC TYPE	MC FURN	MC INST	MC WIRE	CN TYPE	CN FURN	CN INST	CN WIRE	SHORT CIRCUIT RATING CODE REQUIRED?	AVAILABLE FAULT CURRENT
CU-1	VRF OUTDOOR, AIR COOLED UNIT	240 V	1						11	30			EC	EC	EC	MG	MFR	MFR	MFR	LOW	HC	HC	HC	Yes	3520
ECH-1	ELECTRIC CEILNG HEATER	120 V	1				1.5	13					EC	EC	EC	MG	MFR	MFR	MFR	LOW	HC	HC	EC	No	1125
EF-1	HVAC FAN	120 V	1		0.25					15			EC	EC	EC	MG	MFR	MFR	MFR	LINE	EC	EC	EC	No	769
EF-2	HVAC FAN	120 V	1		0.25					15			EC	EC	EC	MG	MFR	MFR	MFR	LINE	EC	EC	EC	No	1142
EF-3	HVAC FAN	120 V	1		0.25					15			EC	EC	EC	MG	MFR	MFR	MFR	LINE	EC	EC	EC	No	1779
EF-4	HVAC FAN	120 V	1		0.167			2.8	3.5	15			EC	EC	EC	MG	MFR	MFR	MFR	LINE	EC	EC	EC	No	2595
EWH-1	ELECTRIC UNIT HEATER	120 V	1				1.5		12.5				EC	EC	EC	MG	MFR	MFR	MFR	INT	MFR	MFR	MFR	No	2557
GFUH-1	GAS FIRED UNIT HEATER	120 V	1					2.4					EC	EC	EC	MG	MFR	MFR	MFR	LOW	HC	HC	EC	No	917
RTU-1	PACKAGED ROOFTOP UNIT, GAS HEAT	240 V	3						42	50			EC	EC	EC	MG	MFR	MFR	MFR	LOW	HC	HC	HC	Yes	1980
RTU-2	PACKAGED ROOFTOP UNIT, GAS HEAT	240 V	3						30	45			EC	EC	EC	MG	MFR	MFR	MFR	LOW	HC	HC	HC	Yes	3678
RTU-3	PACKAGED ROOFTOP UNIT, GAS HEAT	240 V	3						42	50			EC	EC	EC	MG	MFR	MFR	MFR	LOW	HC	HC	HC	Yes	2572
RTU-4	PACKAGED ROOFTOP UNIT, GAS HEAT	240 V	3						20	30			EC	EC	EC	MG	MFR	MFR	MFR	LOW	HC	HC	HC	Yes	922

KEYED NOTES

E3	EXHAUST FAN TO BE CONTACTOR CONTROLLED. COORDINATE HOURS OF OPERATION WITH OSH.

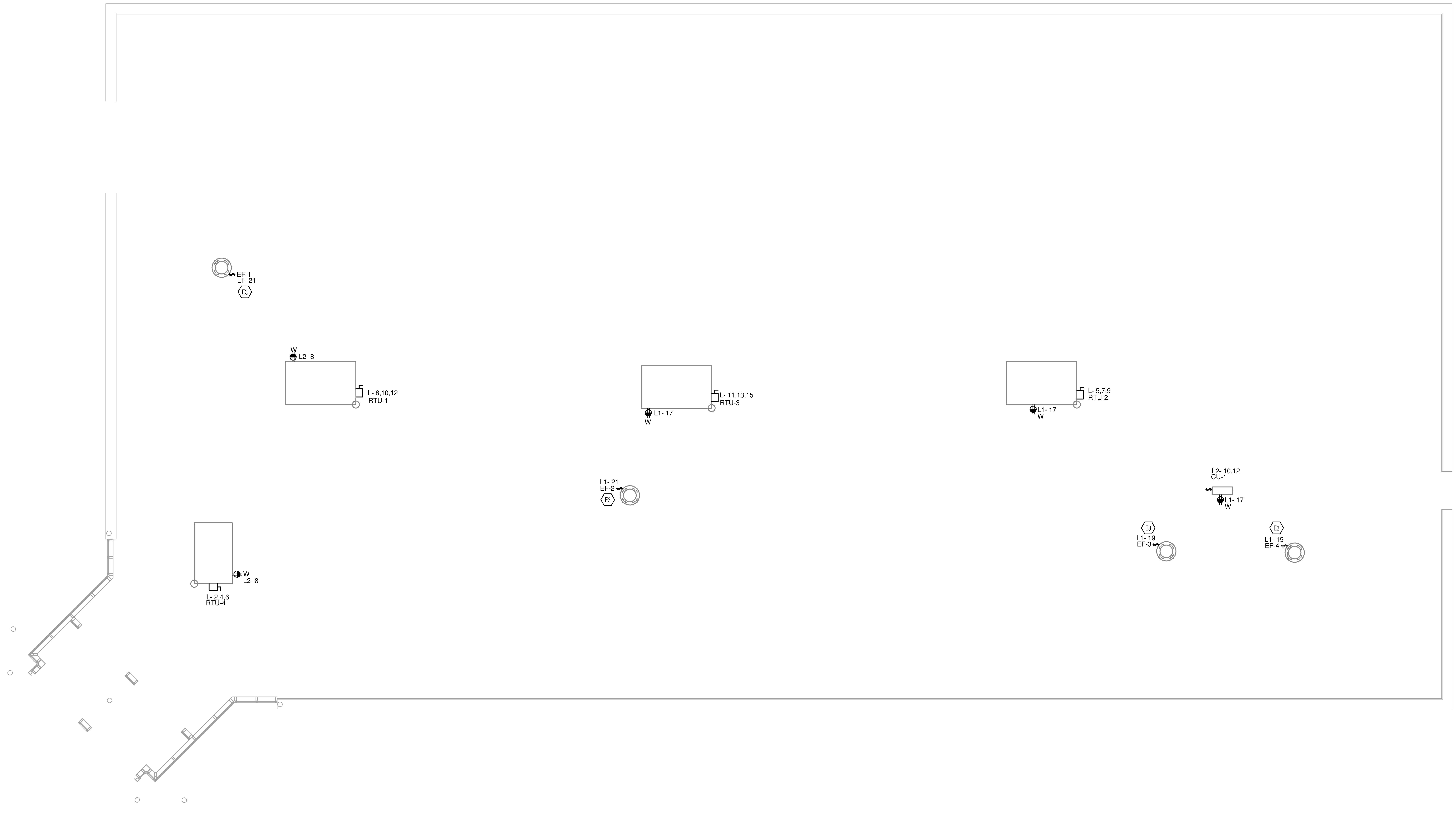

1 ELECTRIC POWER ROOF PLAN
3/16" = 1'-0"

KLH ENGINEERS
MECHANICAL/ELECTRICAL ENGINEERS
WWW.KLHENGRS.COM
LEXINGTON, KENTUCKY
LOUISVILLE, KENTUCKY
COLUMBUS, OHIO
NEW YORK, NEW YORK
KLH #: 25588
KOHRS LONNEMANN HEIL ENGINEERS, INC.
1538 ALEXANDRIA PIKE, SUITE 11
FT. THOMAS, KENTUCKY 41075
800-354-9783 859-442-8050
859-442-8058 FAX

Project

Oak St. Health
520 PENN AVENUE,
WILKINSBURG, PA

Architect

MOODY•NOLAN
300 Spruce Street
Suite 300
Columbus, Ohio 43215
Phone: (614) 461-4664
Fax: (614) 280-8881
www.moodynolan.com

Seal:

COMMONWEALTH OF PENNSYLVANIA
REGISTERED PROFESSIONAL ENGINEER
JAMES S. TAVERNELLI
PE-082782
9/27/2023

Versions

No.	Date	Description

Sheet Title

ELECTRIC POWER ROOF PLAN

Issue Date: 09/05/2023

Drawn KLH

Project No. 25588

Sheet No.

EP102

ELECTRIC ENCLOSED SWITCH AND CIRCUIT BREAKER SCHEDULE

NOTE: THIS SCHEDULE IS FOR SINGLE-LINE DIAGRAM ENCLOSED SWITCHES AND CIRCUITS BREAKERS ONLY AND MAY NOT INCLUDE ALL ENCLOSED SWITCHES AND CIRCUIT BREAKERS REQUIRED IN THESE CONSTRUCTION DOCUMENTS.

TYPICAL EQUIPMENT NAME NOMENCLATURE:
1 - POWER DISTRIBUTION SYSTEM (BLANK - NORMAL, E - EMERGENCY, S - STANDBY, L - LIFE SAFETY)
2 - DESCRIPTION (H - 480Y/277V, L - 208Y/120V)
3 - FLOOR / LEVEL
4 - SEQUENCE

EQUIPMENT	PHASE	SPACE NUMBER	SPACE NAME	SUPPLY FROM	POWER BRANCH	TYPE	VOLTAGE	PHASE	WIRES	DEMAND (kVA)	DEMAND (A)	TRIP RATING (A)	FRAME RATING (A)	OCP TYPE	FEEDER	ULSE	GEC	ENCLOSURE TYPE	FAULT CURRENT (A)	SHORT CIRCUIT RATING (A)	NOTES
SLD	Existing	105	ELECTRICAL/FIRE	WW	NORMAL	Fused Switch	240	1	3	9800 VA	41 A	100	100	FUSED	EXISTING FEEDER, AT RATING INDICATED, TO REMAIN UNLESS NOTED OTHERWISE			NEMA 1	19183	EXISTING	
L2D	Existing	105	ELECTRICAL/FIRE	WW	NORMAL	Fused Switch	240	1	3	14300 VA	60 A	100	100	FUSED	EXISTING FEEDER, AT RATING INDICATED, TO REMAIN UNLESS NOTED OTHERWISE			NEMA 1	18773	EXISTING	

ELECTRIC PANELBOARD AND SWITCHBOARD SCHEDULE

TYPICAL EQUIPMENT NAME NOMENCLATURE:
1 - POWER DISTRIBUTION SYSTEM (BLANK - NORMAL, E - EMERGENCY, S - STANDBY, L - LIFE SAFETY)
2 - DESCRIPTION (H - 480Y/277V, L - 208Y/120V)
3 - FLOOR / LEVEL
4 - SEQUENCE

EQUIPMENT	PHASE	SPACE NUMBER	SPACE NAME	SUPPLY FROM	POWER BRANCH	TYPE	VOLTAGE	PHASE	WIRES	DEMAND (kVA)	DEMAND (A)	MAINS RATING (A)	MAINS FRAME RATING (A)	MAINS TYPE	MOUNTING	FEEDER	LUGS TYPE	SPD	ULSE	GEC	ENCLOSURE TYPE	FAULT CURRENT (A)	SHORT CIRCUIT RATING (A)	NOTES
L	Existing	105	ELECTRICAL/FIRE	UTILITY		Branch Panelboard	240	3	3	60309 VA	145 A	200	200	THERMAL MAGNETIC	SURFACE	EXISTING FEEDER, AT RATING INDICATED, TO REMAIN UNLESS NOTED OTHERWISE						19845	EXISTING	
L1	Existing	105	ELECTRICAL/FIRE	WW		Branch Panelboard	240	1	3	29427 VA	123 A	200	200	THERMAL MAGNETIC	SURFACE	EXISTING FEEDER, AT RATING INDICATED, TO REMAIN UNLESS NOTED OTHERWISE						21186	EXISTING	
L2	Existing	105	ELECTRICAL/FIRE	L2D		Branch Panelboard	240	1	3	14300 VA	60 A	100	100	THERMAL MAGNETIC	SURFACE	EXISTING FEEDER, AT RATING INDICATED, TO REMAIN UNLESS NOTED OTHERWISE						17837	22000	
L3	Existing	105	ELECTRICAL/FIRE	WW		Branch Panelboard	240	1	3	21430 VA	89 A	200	200	THERMAL MAGNETIC	SURFACE	EXISTING FEEDER, AT RATING INDICATED, TO REMAIN UNLESS NOTED OTHERWISE						21484	EXISTING	
SL	Existing	105	ELECTRICAL/FIRE	SLD	NORMAL	Branch Panelboard	240	1	3	9800 VA	41 A	100	100	THERMAL MAGNETIC	SURFACE	EXISTING FEEDER, AT RATING INDICATED, TO REMAIN UNLESS NOTED OTHERWISE					NEMA 1	18700	EXISTING	

OSH ELECTRIC CONTACTOR SCHEDULE

NOTES:
1) PROVIDE A MINIMUM OF (2) SPARE CONTACTS IN EACH CONTACTOR UNLESS NOTED OTHERWISE.
2) REFER TO SPECIFICATIONS FOR ADDITIONAL INFORMATION.
3) CONTACTOR DESIGNATIONS DO NOT INDICATE QUANTITY OF CONTACTORS, THEY INDICATE CONTACTOR GROUPING(S) AND COMMON CONTROL METHODS ONLY. PROVIDE QUANTITY OF CONTACTOR(S) NEEDED TO ACCOMMODATE NUMBER OF POLES SHOWN.

CONTROL ZONE DESCRIPTION & CONTACTOR CONTROL METHOD

C1 - AUTOMATIC OFF DURING NON-BUSINESS HOURS

C2 -AUTOMATIC ON AT DUSK AND OFF ONE HOUR AFTER BUSINESS CLOSING

SUPPLY	CIRCUIT NUMBER	NUMBER OF POLES	CONTACT CURRENT	LOAD NAME
C1				
L1	19	1	8.6 A	(#) EF-3,4 | MOTOR
L1	21	1	11.6 A	(#) EF-1,2 | MOTOR
L3	3	1	4.5 A	RCPT CONFERENCE 137
L3	6	1	3.0 A	RCPT OFFICE 3 112
L3	35	1	3.0 A	(#) RCPT OFFICE 2 118
L3	31	1	3.0 A	(#) RCPT OFFICE 1 117
SL	30	1	4.5 A	RCPT CARE TEAM 1 146
SL	8	1	4.5 A	(#) RCPT CARE TEAM 1 146
SL	19	1	3.0 A	RCPT CARE TEAM 3 148
SL	22	1	3.0 A	RCPT CARE TEAM 3 148
SL	9	1	4.5 A	(#) RCPT CARE TEAM 2 149
SL	26	1	3.0 A	RCPT CARE TEAM 2 149
SL	20	1	3.0 A	RCPT CARE TEAM 2 149
SL	10	1	4.5 A	(#) RCPT CARE TEAM 2 149
SL	18	1	3.0 A	RCPT CARE TEAM 1 146
C2				
L1	32	1	10.0 A	(#) SIGNAGE | CONTINUOUS
L1	36	1	0.1 A	EXTERIOR LIGHTING

ELECTRIC EQUIPMENT SUPPLY SCHEDULE

EQUIPMENT MARK	SUPPLY FROM	CKT	EMERG.	LOAD (kVA)	AVAILABLE FAULT CURRENT	VOLTS	POLE	HTG KW	WATT	HP	FLA (A)	MCA (A)	RQD OCP (A)	BREAKER RATING (A)
CP	L2	1		0.11	1728	120 V	1		0.04					20
CU-1	L2	10,12		2.38	3520	240 V	2					11	30	30
DS-1		1,3		0.36	5227	240 V	2				1.5			30
ECH-1	L1	30		1.56	1125	120 V	1	1.5			13			20
EF-1	L1	21		0.70	769	120 V	1			0.25			15	15
EF-2	L1	21		0.70	1142	120 V	1			0.25			15	15
EF-3	L1	19		0.70	1779	120 V	1			0.25			15	15
EF-4	L1	19		0.34	2595	120 V	1			0.167	2.8	3.5	15	15
EWC	L1	16		0.60	514	120 V	1				5			20
EWH-1	L2	3		1.50	2557	120 V	1	1.5				12.5		20
GFUH-1	L2	5		0.29	917	120 V	1				2.4			20
RTU-1	L	8,10,12		15.71	1980	240 V	3					42	50	50
RTU-2	L	5,7,9		11.22	3678	240 V	3					30	45	45
RTU-3	L	11,13,15		15.71	2572	240 V	3					42	50	50
RTU-4	L	2,4,6		7.48	922	240 V	3					20	30	30
WH	L	1,3		5.00	6006	240 V	2	5						30

PLUMBING ELECTRICAL COORDINATION SCHEDULE

ABBREVIATIONS		CONTRACTOR TYPE		MOTOR CONTROL TYPE		CONTROL TYPE		SHORT CIRCUIT RATING
DC	LOCAL DISCONNECT	EC	ELECTRICAL CONTRACTOR	CS	COMBINATION STARTER	TC	TIMECLOCK	WHERE SHORT CIRCUIT
MC	MOTOR CONTROL (POWER)	EX	EXISTING	MCC	MOTOR CONTROL STARTER	CPT	CONTROL POWER TRANSFORMER	RATING CODE REQUIRED
SD	DUCT SMOKE DETECTOR	FC	FIRE PROTECTION CONTRACTOR	MG	MAGNETIC STARTER OR CONTACT	BAS	BUILDING AUTOMATION SYSTEM	VALUE INDICATES "YES"
CN	CONTROLS	GC	GENERAL CONTRACTOR	MS	MANUAL STARTER	LOW	LOW VOLTAGE CONTROLS	APPLICABLE EQUIPMENT'S
TS	TOGGLE SWITCH	HC	HVAC CONTRACTOR	VFD	VARIABLE FREQUENCY DRIVE	LINE	LINE VOLTAGE CONTROLS	SHORT CIRCUIT RATING
C/B	H.A.C.R. CIRCUIT BREAKER AT SOURCE PANELBOARD	MFR	MANUFACTURER	MSR	MANUAL STARTER W/ CONTROL RELAY	RLINE	REVERSE ACTING LINE VOLTAGE	SHALL EXCEED THE
FUSE	FUSE AT LOCAL DISCONNECT (VERIFY FIELD RATING)	PC	PLUMBING CONTRACTOR	OV	OVERCURRENT PROTECTION	MAN	THERMOSTAT	AVAILABLE FAULT CURRENT
FLA	OPERATING FULL LOAD AMPS	OR	OWNER OR OTHERS			FA	MANUAL	VALUE INDICATED.
MCA	MINIMUM CIRCUIT AMPACITY					CO	FIRE ALARM	
CP	CORD AND PLUG CONNECTION					INT	CARBON MONOXIDE SENSOR	
[BLANK]	HARD WIRED (WHEN INDICATED FOR DC TYPE)					ASD	INTEGRAL TO EQUIPMENT	
						DSD	AREA SMOKE DETECTOR...	

CONNECTION MARK	DESCRIPTION	VOLTAGE	PHASE	HP	WATTS	HTG KW	FLA (A)	MCA (A)	OCP (A)	FED FROM	DC TYPE	DC FURN	DC INST	DC WIRE	MC TYPE	MC FURN	MC INST	MC WIRE	CN TYPE	CN FURN	CN INST	CN WIRE	SHORT CIRCUIT RATING CODE REQUIRED?	AVAILABLE FAULT CURRENT
EWC	WATER COOLER	120 V	1				5				CP	EC	EC	EC	MG				MAN	MFR	MFR	MFR	No	514
WH	TANK TYPE ELECTRIC WATER HEATER	240 V	1			5						EC	EC	EC	--	--	--	--	INT	MFR	MFR	MFR	No	6006
CP	DOMESTIC HOT WATER CIRCULATION PUMP	120 V	1	0.04								EC	EC	EC	MG	MFR	MFR	MFR	LINE	PC	PC	EC	No	1728

ELECTRIC FEEDER SCHEDULE

NOTES:
ALL CONDUIT SIZES INDICATED ARE MINIMUM SIZES. INCREASE SIZES AS REQUIRED TO ACCOMMODATE CONDUCTOR PULLING EASE, FIELD CONDITIONS, ETC.

"CU" = COPPER CONDUCTOR,
"AL" = ALUMINUM CONDUCTOR

** WHERE THESE FIELDS ARE BLANK, PROVIDE INSULATION & CONDUIT MATERIAL PER THE CONDUIT & WIRE MATERIAL SCHEDULE.

FEEDER ID NOMENCLATURE:
* - INDICATES FEEDER SIZED TO COMPENSATE FOR VOLTAGE DROP
1 - GROUND TYPE (MAY BE BLANK)
U = EQUIPMENT GROUND CONDUCTOR REMOVED FOR SERVICE ENTRANCE FROM UTILITY
P = PARITY-SIZED EQUIPMENT GROUND CONDUCTOR
X = EXISTING FEEDER TO REMAIN UNLESS OTHERWISE NOTED
T = UPSIZED GROUND CONDUCTORS FOR TRANSFORMER SECONDARY
2 - CONDUCTOR AMPACITY
3 - TOTAL NUMBER OF PHASE AND GROUNDED ("NEUTRAL") CONDUCTORS
4 - CONDUCTOR MATERIAL: C = COPPER, A = ALUMINUM
5 - SPECIAL (MAY BE BLANK)
I = ISOLATED GROUND (PROVIDE CONTINUOUS INSULATED ISOLATED EQUIPMENT GROUNDING CONDUCTOR(S) FROM INSULATED ISOLATED GROUND BAR(S) TO RESPECTIVE UPSTREAM SERVICE ENTRANCE OR DERIVED SYSTEM GROUNDING ELECTRODE CONDUCTOR AS APPLICABLE.

SUPPLY TO	SUPPLY FROM	FEEDER ID	FEEDER	INSULATION **	CONDUIT**	DEMAND (A)	VD %	NOTES
UTILITY								
-- L	UTILITY	X200	EXISTING FEEDER, AT RATING INDICATED, TO REMAIN UNLESS NOTED OTHERWISE			145 A	0.201	
-- WW	UTILITY	X400	EXISTING FEEDER, AT RATING INDICATED, TO REMAIN UNLESS NOTED OTHERWISE			269 A	0.256	
----- L1	WW	X200	EXISTING FEEDER, AT RATING INDICATED, TO REMAIN UNLESS NOTED OTHERWISE			123 A	0.333	
----- L3	WW	X200	EXISTING FEEDER, AT RATING INDICATED, TO REMAIN UNLESS NOTED OTHERWISE			89 A	0.292	
----- L2D	WW	X100	EXISTING FEEDER, AT RATING INDICATED, TO REMAIN UNLESS NOTED OTHERWISE			60 A	0.283	
------ L2	L2D	X100	EXISTING FEEDER, AT RATING INDICATED, TO REMAIN UNLESS NOTED OTHERWISE			60 A	0.292	
----- SLD	WW	X100	EXISTING FEEDER, AT RATING INDICATED, TO REMAIN UNLESS NOTED OTHERWISE			41 A	0.341	
------ SL	SLD	X100	EXISTING FEEDER, AT RATING INDICATED, TO REMAIN UNLESS NOTED OTHERWISE			41 A	0.356	

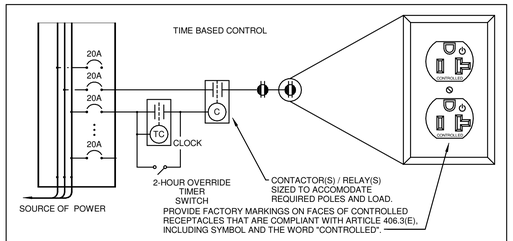

262726.00-03 - SWITCHED RECEPTACLE DETAIL

SCALE: NONE

GENERAL NOTES:

A. ALIGN ALL DEVICES SHOWN ON PLANS AT SAME DIMENSION FROM DOOR FRAME OR WALL.
B. CONDUIT/CABLES SHALL BE ROUTED WHEREVER NECESSARY TO KEEP DEVICES ALIGNED.
C. ALL DEVICES MOUNTED AT SAME HEIGHT TO BE ALIGNED HORIZONTALLY. ENSURE ALL DEVICES ARE LEVEL AND PLUMB AFTER INSTALLATION.
D. FOR MULTI-GANG DEVICES, ALIGN DEVICES AT CENTER OF GROUP. PROVIDE SINGLE FACEPLATE FOR GROUPS OF DEVICES WHERE APPLICABLE.
E. COORDINATE WITH ALL TRADES CASE-BY-CASE.

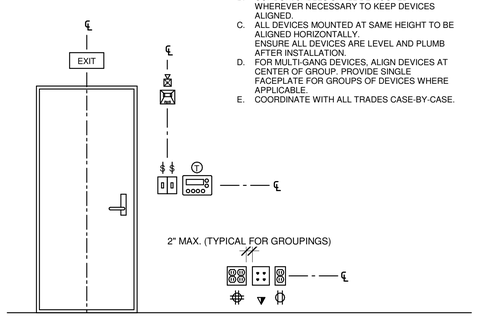

260502.00-01 - DEVICE ALIGNMENT DETAIL

SCALE: NONE

FAULT CURRENT CALCULATIONS WERE PERFORMED USING A UTILITY TRANSFORMER SIZE OF 150kVA WITH 1.5% IMPEDANCE.

EC RESPONSIBLE FOR ALL NECESSARY UTILITY COORDINATION. EXISTING SERVICE(S) ARE TO REMAIN, HOWEVER, THE UTILITY MAY DETERMINE A UTILITY TRANSFORMER UPGRADE IS NECESSARY.

EC TO RELOCATE EXISTING PANEL L2 TO ELECTRICAL ROOM. FIELD VERIFY IF EXISTING FEEDER/CONDUIT CAN BE MODIFIED/SHORTENED FOR USE WITH NEW LOCATION.

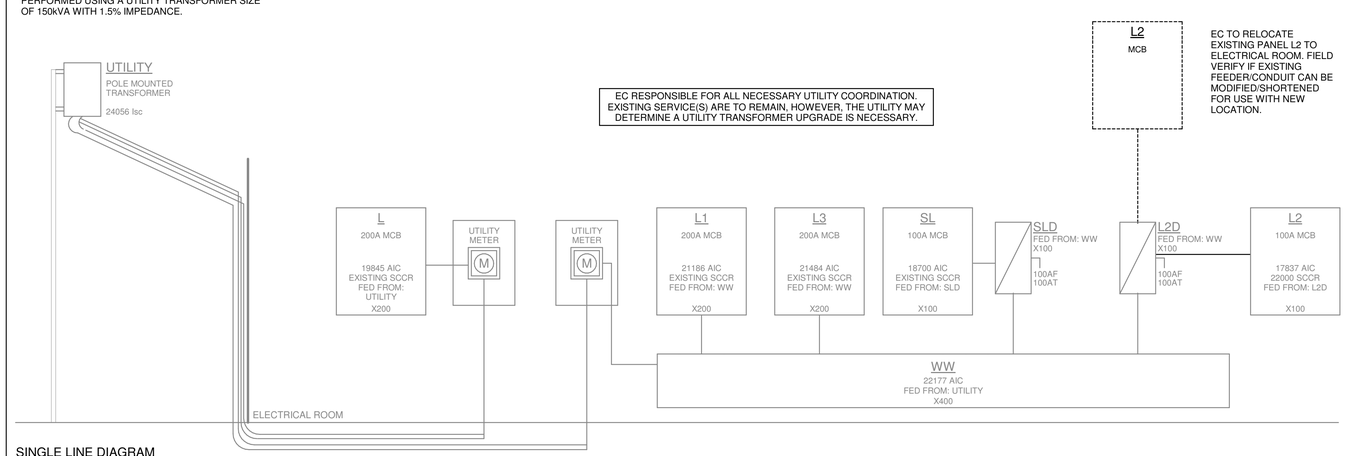

SINGLE LINE DIAGRAM

SCALE: NONE

MECHANICAL/ELECTRICAL ENGINEERS
WWW.KLHENGRS.COM
LEXINGTON, KENTUCKY
LOUISVILLE, KENTUCKY
COLUMBUS, OHIO
NEW YORK, NEW YORK
KLH #: 25588

KLH ENGINEERS
KOHRS LONNEMANN HEIL ENGINEERS, INC.
1538 ALEXANDRIA PIKE, SUITE 11
FT. THOMAS, KENTUCKY 41075
859-442-8050 PHONE
859-442-8058 FAX

Project

Oak St. Health

520 PENN AVENUE,
WILKINSBURG, PA

Architect

MOODY•NOLAN
300 Spruce Street
Suite 300
Columbus, Ohio 43215
Phone: (614) 461-4664
Fax: (614) 280-8881
www.moodynolan.com

Seal:

COMMONWEALTH OF PENNSYLVANIA
REGISTERED PROFESSIONAL
JAMES S. TAVERNELLI
ENGINEER
PE-082782
9/27/2023

Versions

No.	Date	Description

Sheet Title

ELECTRIC SINGLE LINE AND SCHEDULES

Issue Date: 09/05/2023

Drawn: KLH

Project No. 25588

Sheet No.

EP601

PANEL NAME: L3

SUPPLY FROM: WW
LOCATION: ELECTRICAL/FIRE 105
DISTRIBUTION SYSTEM: 240/120V 1PH 3W
FEEDER: EXISTING FEEDER, AT RATING INDICATED, TO REMAIN UNLESS NOTED OTHERWISE
MAINS RATING (A): 200
MAINS TYPE: THERMAL MAGNETIC
FEEDER ID: X200
FAULT CURRENT (A): 21484
SHORT CIRCUIT RATING (A): EXISTING
LUGS TYPE:
ENCLOSURE TYPE:
PHASE: Existing
SURGE SUPRESSION:
ULSE:
200% NEUTRAL:
ISOLATED GROUND:

CKT	CIRCUIT DESCRIPTION	VD%	AWG	GND	TRIP	FRAME	POLE	A		B		POLE	FRAME	TRIP	GND	AWG	VD%	CIRCUIT DESCRIPTION	CKT
1	FLAT PANEL DISPLAY | RCPT, NON-CONT....	4.34	#12	#12	20 A	20 A	1	1.02	0.36			1	20 A	20 A	#12	#12	1.46	RCPT OFFICE 3 112	2
3	RCPT CONFERENCE 137	2.359	#12	#12	20 A	20 A	1			0.54	0.54	1	20 A	20 A	#12	#12	2.171	RCPT ENROLLMENT 135	4
5	(G)(LT) HAND DRYER | RCPT, NON-CONT. EMPLOYE...	1.117	#12	#12	20 A	20 A	1	1.00	0.36			1	20 A	20 A	#12	#12	1.543	RCPT OFFICE 3 112	6
7	(#) MW | NON-CONT. BREAK ROOM 107	0.943	#12	#12	20 A	20 A	1			1.20	0.80	1	20 A	20 A	#12	#12	0.682	(G) REF. | MOTOR BREAK ROOM 107	8
9	(G) EWC | NON-CONT. BREAK ROOM 107	0.316	#12	#12	20 A	20 A	1	0.40	0.66			1	20 A	20 A	#12	#12	1.783	FLAT PANEL DISPLAY | RCPT CONSULT 128	10
11	(#) COFFEE | NON-CONT. BREAK ROOM 107	0.562	#12	#12	20 A	20 A	1			0.80	0.90	1	20 A	20 A	#12	#12	3.35	(#) RCPT EXAM 2 109	12
13	(#) NON-CONT. BREAK ROOM 107	0.031	#12	#12	20 A	20 A	1	0.05	0.90			1	20 A	20 A	#12	#12	3.136	(#) RCPT EXAM 3 108	14
15	(#) RCPT BREAK ROOM 107	0.177	#12	#12	20 A	20 A	1			0.36	0.90	1	20 A	20 A	#12	#12	2.629	(#) RCPT EXAM 5 126	16
17	(#) RCPT BREAK ROOM 107	0.104	#12	#12	20 A	20 A	1	0.36	0.90			1	20 A	20 A	#12	#12	2.927	(#) RCPT EXAM 4 127	18
19	(#) RCPT AISLE 4 141	2.303	#12	#12	20 A	20 A	1			1.00	0.90	1	20 A	20 A	#12	#12	1.945	(#) RCPT EXAM 6 103	20
21	(#) RCPT HALLWAY 140	0.827	#12	#12	20 A	20 A	1	1.26	0.90			1	20 A	20 A	#12	#12	1.68	(#) RCPT EXAM 7 104	22
23	(#) RCPT OUTREACH 136	3.627	#12	#12	20 A	20 A	1			0.72	0.90	1	20 A	20 A	#12	#12	1.44	(#) RCPT EXAM 8 129	24
25	(#) RCPT 136,122	3.233	#12	#12	20 A	20 A	1	0.72	0.90			1	20 A	20 A	#12	#12	1.177	(#) RCPT EXAM 9 130	26
27	(#) PRINTER | NON-CONT. OUTREACH 136	2.2	#12	#12	20 A	20 A	1			0.50	0.90	1	20 A	20 A	#12	#12	0.907	(#) RCPT EXAM 10 111	28
29	(#) RCPT OUTREACH 136	3.479	#12	#12	20 A	20 A	1	0.72	0.90			1	20 A	20 A	#12	#12	0.979	(#) RCPT EXAM 11 110	30
31	(#) RCPT OFFICE 1 117	1.454	#12	#12	20 A	20 A	1			0.36	0.90	1	20 A	20 A	#12	#12	1.331	(#) RCPT EXAM 12 115	32
33	(#) RCPT OFFICE 1 117	1.368	#12	#12	20 A	20 A	1	0.36	0.90			1	20 A	20 A	#12	#12	1.482	(#) RCPT EXAM 13 124	34
35	(#) RCPT OFFICE 2 118	1.36	#12	#12	20 A	20 A	1			0.36	0.90	1	20 A	20 A	#12	#12	1.738	(#) RCPT BARIATRIC EXAM ROOM 14 116	36
37	RCPT OFFICE 2 118	1.359	#12	#12	20 A	20 A	1	0.36	0.90			1	20 A	20 A	#12	#12	3.122	RCPT EXAM 1 119	38
39	SPARE	--	--	--	20 A	20 A	1			0.00	0.00	1	20 A	20 A	--	--	--	SPARE	40
41	SPARE	--	--	--	20 A	20 A	1	0.00	0.00			1	20 A	20 A	--	--	--	SPARE	42
							TOTAL CONNECTED LOAD:	13.9 kVA		13.5 kVA									

LOAD CLASSIFICATION	CONNECTED LOAD	DEMAND FACTOR	ESTIMATED DEMAND
Continuous	0 VA	0.00%	0 VA
Cooling	0 VA	0.00%	0 VA
Elevator	0 VA	0.00%	0 VA
Heating	0 VA	0.00%	0 VA
Kitchen Equipment	0 VA	0.00%	0 VA
Lighting	0 VA	0.00%	0 VA
Motor	800 VA	125.00%	1000 VA
Non-Continuous	4250 VA	100.00%	4250 VA
Receptacle	22360 VA	72.36%	16180 VA

PANEL TOTALS	
EXISTING CONNECTED LOAD:	
EXISTING LOAD DEMAND FACTOR:	
ADDED CONNECTED LOAD:	27410 VA
DEMAND CALCULATION NOTES:	
TOTAL DEMAND:	21430.0 VA
TOTAL DEMAND AMPS:	**89 A**

NOTES:

BREAKER QUANTITIES (NEW ONLY)
(12) 20A / 1P, (2) 20A / 1P(G), (1) 20A / 1P(G) (LT)

PANEL NAME: L1

SUPPLY FROM: WW
LOCATION: ELECTRICAL/FIRE 105
DISTRIBUTION SYSTEM: 240/120V 1PH 3W
FEEDER: EXISTING FEEDER, AT RATING INDICATED, TO REMAIN UNLESS NOTED OTHERWISE
MAINS RATING (A): 200
MAINS TYPE: THERMAL MAGNETIC
FEEDER ID: X200
FAULT CURRENT (A): 21186
SHORT CIRCUIT RATING (A): EXISTING
LUGS TYPE:
ENCLOSURE TYPE:
PHASE: Existing
SURGE SUPRESSION:
ULSE:
200% NEUTRAL:
ISOLATED GROUND:

CKT	CIRCUIT DESCRIPTION	VD%	AWG	GND	TRIP	FRAME	POLE	A		B		POLE	FRAME	TRIP	GND	AWG	VD%	CIRCUIT DESCRIPTION	CKT
1	(#) LTG 138, 139	1.217	#12	#12	20 A	20 A	1	0.34	0.80			1	20 A	20 A	*#10	*#10	2.704	(#) COFFEE | NON-CONT. COMMUNITY ROOM 151	2
3	(#) LTG 114,113	0.882	#12	#12	20 A	20 A	1			0.21	0.80	1	20 A	20 A	*#10	*#10	2.724	(#) COFFEE | NON-CONT. COMMUNITY ROOM 151	4
5	(#) LTG 151,152	1.798	#12	#12	20 A	20 A	1	0.46	0.36			1	20 A	20 A	#12	#12	1.545	(#) RCPT 113,114	6
7	(#) LTG 145,112,118,121,120,137,135,117,140,119	2.05	*#10	*#10	20 A	20 A	1			1.01	1.00	1	20 A	20 A	*#10	*#10	2.505	(G)(LT) HAND DRYER | NON-CONT. MEN'S...	8
9	(#) LTG...	0.051	!#4/0	!#4/0	20 A	20 A	1	0.86	1.00			1	20 A	20 A	*#10	*#10	2.817	(G)(LT) HAND DRYER | NON-CONT. WOMEN'S...	10
11	(#) LTG...	0.202	#12	#12	20 A	20 A	1			0.88	0.56	1	20 A	20 A	#12	#12	2.48	(#) DOOR OPERATOR | NON-CONT. 138,114	12
13	(#) LTG 149,146,148,101,147	1.695	#12	#12	20 A	20 A	1	0.85	0.56			1	20 A	20 A	#12	#12	2.393	(#) DOOR OPERATOR | NON-CONT. 138,113	14
15	(#) LTG FUTURE PHARMACY 102	0.118	#12	#12	20 A	20 A	1			0.05	1.00	1	20 A	20 A	#12	#12	4.069	(G) EWC EWC | NON-CONT. RECEPTION 138	16
17	(#) RCPT	0.772	#12	#12	20 A	20 A	1	0.54	0.90			1	20 A	20 A	#12	#12	3.155	(#) RCPT RECEPTION 138	18
19	(#) EF-3,4 | MOTOR	1.072	#12	#12	15 A	15 A	1			1.03	0.72	1	20 A	20 A	#12	#12	2.846	(#) RCPT RECEPTION 138	20
21	(#) EF-1,2 | MOTOR	2.694	*#10	*#10	15 A	15 A	1	1.39	0.36			1	20 A	20 A	#12	#12	1.522	(#) RCPT RECEPTION 138	22
23	(G)(LT) HAND DRYER | RCPT, NON-CONT. CLINIC...	1.841	*#10	*#10	20 A	20 A	1			1.00	0.56	1	20 A	20 A	#12	#12	2.331	(#) DOOR OPERATOR | NON-CONT. 138,139	24
25	(#) RCPT LAB 121	2.133	#12	#12	20 A	20 A	1	0.72	0.48			1	20 A	20 A	#12	#12	2.206	(#) RCPT, NON-CONT. COMMUNITY ROOM 151	26
27	(G) UCR | MOTOR LAB 121	2.808	#12	#12	20 A	20 A	1			0.80	0.56	1	20 A	20 A	#12	#12	2.444	(#) DOOR OPERATOR | NON-CONT. EXISTING...	28
29	RCPT LAB 121	1.308	#12	#12	20 A	20 A	1	0.36	1.56			1	20 A	20 A	*#8	*#8	2.675	(#) ECH-1 | HEATING EXISTING VESTIBULE 139	30
31	(#) LTG HALLWAY 142	0.816	#12	#12	20 A	20 A	1			0.98	1.20	1	20 A	20 A	#12	#12	4.43	(#) SIGNAGE | CONTINUOUS	32
33	(G) UCR | MOTOR LAB 121	1.815	*#10	*#10	20 A	20 A	1	0.80	0.00			1	20 A	20 A	--	--	--	SPARE	34
35	(#) RCPT, NON-CONT. COMMUNITY ROOM 151	2.282	*#10	*#10	20 A	20 A	1			0.90	0.01	1	20 A	20 A	#12	#12	0.008	EXTERIOR LIGHTING	36
37	(#) DOOR OPERATOR | NON-CONT. 138,151	2.455	#12	#12	20 A	20 A	1	0.56	0.00			1	20 A	20 A	--	--	--	(#) SPARE	38
39	(#) RCPT COMMUNITY ROOM 151	2.888	#12	#12	20 A	20 A	1			0.54	0.00	1	20 A	20 A	--	--	--	(#) SPARE	40
41	(G) UCR | MOTOR COMMUNITY ROOM 151	2.712	*#10	*#10	20 A	20 A	1	0.80	0.00			1	20 A	20 A	--	--	--	(#) SPARE	42
							TOTAL CONNECTED LOAD:	13.7 kVA		13.8 kVA									

LOAD CLASSIFICATION	CONNECTED LOAD	DEMAND FACTOR	ESTIMATED DEMAND
Continuous	1200 VA	125.00%	1500 VA
Cooling	0 VA	0.00%	0 VA
Elevator	0 VA	0.00%	0 VA
Heating	1560 VA	100.00%	1560 VA
Kitchen Equipment	0 VA	0.00%	0 VA
Lighting	5650 VA	125.00%	7063 VA
Motor	4824 VA	104.15%	5024 VA
Non-Continuous	8700 VA	100.00%	8700 VA
Receptacle	5580 VA	100.00%	5580 VA

PANEL TOTALS	
EXISTING CONNECTED LOAD:	
EXISTING LOAD DEMAND FACTOR:	
ADDED CONNECTED LOAD:	27514 VA
DEMAND CALCULATION NOTES:	
TOTAL DEMAND:	29426.5 VA
TOTAL DEMAND AMPS:	**123 A**

NOTES:

BREAKER QUANTITIES (NEW ONLY)
(3) 20A / 1P, (4) 20A / 1P(G), (3) 20A / 1P(G) (LT)

PANEL NAME: L

SUPPLY FROM: UTILITY
LOCATION: ELECTRICAL/FIRE 105
DISTRIBUTION SYSTEM: 240V 3PH 3W
FEEDER: EXISTING FEEDER, AT RATING INDICATED, TO REMAIN UNLESS NOTED OTHERWISE
MAINS RATING (A): 200
MAINS TYPE: THERMAL MAGNETIC
FEEDER ID: X200
FAULT CURRENT (A): 19845
SHORT CIRCUIT RATING (A): EXISTING
LUGS TYPE:
ENCLOSURE TYPE:
PHASE: Existing
SURGE SUPRESSION:
ULSE:
200% NEUTRAL:
ISOLATED GROUND:

CKT	CIRCUIT DESCRIPTION	VD%	AWG	GND	TRIP	FRAME	POLE	A		B		C		POLE	FRAME	TRIP	GND	AWG	VD%	CIRCUIT DESCRIPTION	CKT
1	WH | CONTINUOUS JANITOR 106	0.589	#10	#10	30 A	30 A	2	2.50	2.49					3	30 A	30 A	#10	#10	2.277	RTU-4 | MOTOR	2
3										2.50	2.49										4
5	RTU-2 | MOTOR	0.732	#6	#10	45 A	45 A	3					3.74	2.49								6
7								3.74	5.24					3	50 A	50 A	#10	#6	2.101	RTU-1 | MOTOR	8
9										3.74	5.24										10
11	RTU-3 | MOTOR	1.564	#6	#10	50 A	50 A	3					5.24	5.24								12
13								5.24	0.00					3	30 A	30 A	--	--	--	SPARE	14
15										5.24	0.00										16
17	SPACE	--	--	--	--	--	1					--	0.00								18
19	SPACE	--	--	--	--	--	1	--	--					1	--	--	--	--	--	SPACE	20
21	SPACE	--	--	--	--	--	1			--	--			1	--	--	--	--	--	SPACE	22
23	SPACE	--	--	--	--	--	1					--	--	1	--	--	--	--	--	SPACE	24
25	SPACE	--	--	--	--	--	1	--	--					1	--	--	--	--	--	SPACE	26
27	SPACE	--	--	--	--	--	1			--	--			1	--	--	--	--	--	SPACE	28
29	SPACE	--	--	--	--	--	1					--	--	1	--	--	--	--	--	SPACE	30
31	SPACE	--	--	--	--	--	1	--	--					1	--	--	--	--	--	SPACE	32
33	SPACE	--	--	--	--	--	1			--	--			1	--	--	--	--	--	SPACE	34
35	SPACE	--	--	--	--	--	1					--	--	1	--	--	--	--	--	SPACE	36
37	SPACE	--	--	--	--	--	1	--	--					1	--	--	--	--	--	SPACE	38
39	SPACE	--	--	--	--	--	1			--	--			1	--	--	--	--	--	SPACE	40
41	SPACE	--	--	--	--	--	1					--	--	1	--	--	--	--	--	SPACE	42
							TOTAL CONNECTED LOAD:	19.2 kVA		19.2 kVA		16.7 kVA									

LOAD CLASSIFICATION	CONNECTED LOAD	DEMAND FACTOR	ESTIMATED DEMAND
Continuous	5000 VA	125.00%	6250 VA
Cooling	0 VA	0.00%	0 VA
Elevator	0 VA	0.00%	0 VA
Heating	0 VA	0.00%	0 VA
Kitchen Equipment	0 VA	0.00%	0 VA
Lighting	0 VA	0.00%	0 VA
Motor	50131 VA	107.84%	54059 VA
Non-Continuous	0 VA	0.00%	0 VA
Receptacle	0 VA	0.00%	0 VA

PANEL TOTALS	
EXISTING CONNECTED LOAD:	
EXISTING LOAD DEMAND FACTOR:	
ADDED CONNECTED LOAD:	55131 VA
DEMAND CALCULATION NOTES:	
TOTAL DEMAND:	60309.2 VA
TOTAL DEMAND AMPS:	**145 A**

NOTES:

BREAKER QUANTITIES (NEW ONLY)
(1) 30A / 2P, (2) 30A / 3P, (1) 45A / 3P, (2) 50A / 3P

PANEL KEY

--	--	--
--	--	L3
--	L1	L

PANEL SCHEDULE LEGEND

- * = WIRE SIZED TO COMPENSATE FOR VOLTAGE DROP
- ** = REFER TO DRAWINGS FOR SPECIFICATIONS
- (#) = NEW CIRCUIT TO EXISTING CIRCUIT BREAKER
- (->) = CONNECT BRANCH CIRCUIT, WHICH WAS DISCONNECTED FROM ANOTHER SOURCE AS PART OF SELECTIVE DEMOLITION, TO POLE SPACE(S) INDICATED, DETERMINE EXACT POLE ASSIGNMENT(S) BASED ON EXISTING COLOR-CODING OF THE BRANCH CIRCUIT CONDUCTOR INSULATION. PROVIDE NEW BREAKER IF REQUIRED.
- (A) = PROVIDE ARC FAULT CIRCUIT INTERRUPTER (AFCI) CIRCUIT BREAKER
- (AG) = PROVIDE COMBINATION ARC FAULT (AFCI) / GROUND FAULT (GFCI) CIRCUIT INTERRUPTER CIRCUIT BREAKER
- (AT) = EXISTING FUSIBLE SWITCH/CIRCUIT BREAKER WITH NEW FUSES/TRIP RATING
- (ERM) = PROVIDE ENERGY REDUCTION MAINTENANCE (REDUCED ENERGY) CIRCUIT BREAKER
- (EX) = EXISTING CIRCUIT TO REMAIN
- (F) = CIRCUIT FOR FURTURE USE. PROVIDE BREAKER INDICATED. LOAD SHOWN FOR REFERENCE ONLY.
- (G) = PROVIDE GROUND-FAULT CIRCUIT INTERRUPTER (GFCI) CIRCUIT BREAKER
- (GE) = PROVIDE GROUND-FAULT EQUIPMENT PROTECTION (GFEP) CIRCUIT BREAKER
- (H) = PROVIDE HANDLE TIE
- (L) = PROVIDE LOCK-ON DEVICE
- (LI) = PROVIDE ELECTRONIC LONG AND INSTANTANEOUS ADJUSTABILITY
- (LSI) = PROVIDE ELECTRONIC LONG, SHORT, AND INSTANTANEOUS ADJUSTABILITY
- (LSIA) = PROVIDE ELECTRONIC LONG, SHORT, INSTANTANEOUS, AND GROUND-FAULT ALARM ADJUSTABILITY
- (LSIG) = PROVIDE ELECTRONIC LONG, SHORT, INSTANTANEOUS, AND GROUND-FAULT ADJUSTABILITY
- (LT) = PROVIDE LOCK-OUT/TAG-OUT DEVICE
- SL = SEE THE SINGLE LINE DIAGRAM / SCHEDULE FOR WIRE SIZE AND VOLTAGE DROP
- (ST) = PROVIDE SHUNT TRIP CIRCUIT BREAKER

PANEL SCHEDULE GENERAL NOTES

A. PROVIDE HACR RATED BREAKERS ON ALL MOTOR LOADS.
B. ALL CONDUCTORS SHOWN ARE COPPER.
C. ALL VOLTAGE DROP CALCULATIONS AND COMPENSATED WIRE SIZES ARE BASED ON RIGHT ANGLE CIRCUIT LENGTHS. ACTUAL VOLTAGE DROP MAY VARY BASED ON INSTALLED WIRE LENGTH.
D. VOLTAGE DROP CALCULATIONS AND WIRE SIZES SHOWN IN THE PANEL SCHEDULES ARE FOR HOMERUN CONDUCTORS ONLY. FOR CIRCUITS WITH MORE THAN 1 DEVICE, THESE SIZES ASSUME THE CONDUCTORS DOWNSTREAM OF THE HOMERUN DEVICE ARE THE MINIMUM SIZE REQUIRED BY THE NEC BASED ON THE RATING OF THE CIRCUIT. WHERE THIS IS NOT THE CASE, IT HAS BEEN INDICATED ON THE DRAWINGS. VOLTAGE DROP TO THE FARTHEST DEVICE HAS BEEN CALCULATED TO NEVER EXCEED 5%.
E. RECEPTACLE LOADS CALCULATED AT 100% OF FIRST 10kVA, 50% OF REMAINDER. MOTOR LOADS CALCULATED AT 125% OF THE LARGEST MOTOR, 100% OF ALL OTHER MOTORS.

KLH ENGINEERS
MECHANICAL/ELECTRICAL ENGINEERS
WWW.KLHENGRS.COM
LEXINGTON, KENTUCKY
LOUISVILLE, KENTUCKY
COLUMBUS, OHIO
NEW YORK, NEW YORK
KLH #: 25588
KOHRS LONNEMANN HEIL ENGINEERS, INC.
1538 ALEXANDRIA PIKE, SUITE 11
FT. THOMAS, KENTUCKY 41075
800-354-9783 859-442-8050
859-442-8058 FAX

Project
Oak St. Health
520 PENN AVENUE,
WILKINSBURG, PA

Architect
MOODY•NOLAN
300 Spruce Street
Suite 300
Columbus, Ohio 43215
Phone: (614) 461-4664
Fax: (614) 280-8881
www.moodynolan.com

Seal:
COMMONWEALTH OF PENNSYLVANIA
REGISTERED PROFESSIONAL
JAMES S. TAVERNELLI
ENGINEER
PE-082782
9/27/2023

Versions

No.	Date	Description

Sheet Title
ELECTRIC POWER - PANEL SCHEDULES

Issue Date: 09/05/2023
Drawn: KLH
Project No. 25588
Sheet No.
EP602

PANEL NAME: SL

SUPPLY FROM: SLD | MAINS RATING (A): 100 | FAULT CURRENT (A): 18700 | PHASE: Existing

LOCATION: ELECTRICAL/FIRE 105 | MAINS TYPE: THERMAL MAGNETIC | SHORT CIRCUIT RATING (A): EXISTING | SURGE SUPRESSION:

DISTRIBUTION SYSTEM: 240/120V 1PH 3W | FEEDER ID: X100 | LUGS TYPE: | ULSE:

FEEDER: EXISTING FEEDER, AT RATING INDICATED, TO REMAIN UNLESS NOTED OTHERWISE | ENCLOSURE TYPE: NEMA 1 | 200% NEUTRAL: | ISOLATED GROUND:

CKT	CIRCUIT DESCRIPTION	VD%	AWG	GND	TRIP	FRAME	POLE	A		B		POLE	FRAME	TRIP	GND	AWG	VD%	CIRCUIT DESCRIPTION	CKT
1	RCPT 147,149	1.334	#12	#12	20 A	20 A	1	0.54	0.00			2	100 A	100 A	--	--	--	(EX) MAIN	2
3	RCPT CARE TEAM 1 146	1.065	#12	#12	20 A	20 A	1			0.54	0.00								4
5	(#) RCPT CARE TEAM 2 149	1.35	#12	#12	20 A	20 A	1	0.54	0.54			1	20 A	20 A	#12	#12	1.626	(#) RCPT CARE TEAM 2 149	6
7	(#) RCPT CARE TEAM 1 146	1.126	#12	#12	20 A	20 A	1			0.54	0.54	1	20 A	20 A	#12	#12	1.136	(#) RCPT CARE TEAM 1 146	8
9	(#) RCPT CARE TEAM 2 149	1.339	#12	#12	20 A	20 A	1	0.54	0.54			1	20 A	20 A	#12	#12	1.826	(#) RCPT CARE TEAM 2 149	10
11	(#) COPIER | NON-CONT. CARE TEAM 1 146	2.124	#12	#12	20 A	20 A	1			0.80	0.36	1	20 A	20 A	#12	#12	0.993	(#) RCPT CARE TEAM 3 148	12
13	(#) RCPT CARE TEAM 3 148	1.102	#12	#12	20 A	20 A	1	0.36	0.36			1	20 A	20 A	#12	#12	1.263	(#) RCPT CARE TEAM 2 149	14
15	(#) RCPT CARE TEAM 2 149	1.104	#12	#12	20 A	20 A	1			0.36	0.36	1	20 A	20 A	#12	#12	0.921	(#) RCPT CARE TEAM 1 146	16
17	RCPT CARE TEAM 2 149	1.815	#12	#12	20 A	20 A	1	0.54	0.36			1	20 A	20 A	#12	#12	0.931	RCPT CARE TEAM 1 146	18
19	RCPT CARE TEAM 3 148	1.108	#12	#12	20 A	20 A	1			0.36	0.36	1	20 A	20 A	#12	#12	1.255	RCPT CARE TEAM 2 149	20
21	SPARE	--	--	--	20 A	20 A	1	0.00	0.36			1	20 A	20 A	#12	#12	0.985	RCPT CARE TEAM 3 148	22
23	SPARE	--	--	--	20 A	20 A	1			0.00	0.00	1	20 A	20 A	--	--	--	SPARE	24
25	SPARE	--	--	--	20 A	20 A	1	0.00	0.36			1	20 A	20 A	#12	#12	1.096	RCPT CARE TEAM 2 149	26
27	SPARE	--	--	--	20 A	20 A	1			0.00	0.00	1	20 A	20 A	--	--	--	SPARE	28
29	SPARE	--	--	--	20 A	20 A	1	0.00	0.54			1	20 A	20 A	#12	#12	1.055	RCPT CARE TEAM 1 146	30
							TOTAL CONNECTED LOAD:	5.6 kVA		4.2 kVA									

LOAD CLASSIFICATION	CONNECTED LOAD	DEMAND FACTOR	ESTIMATED DEMAND	PANEL TOTALS	
Continuous	0 VA	0.00%	0 VA	EXISTING CONNECTED LOAD:	
Cooling	0 VA	0.00%	0 VA	EXISTING LOAD DEMAND FACTOR:	
Elevator	0 VA	0.00%	0 VA	ADDED CONNECTED LOAD:	9800 VA
Heating	0 VA	0.00%	0 VA	DEMAND CALCULATION NOTES:	
Kitchen Equipment	0 VA	0.00%	0 VA		
Lighting	0 VA	0.00%	0 VA	TOTAL DEMAND:	9800.0 VA
Motor	0 VA	0.00%	0 VA	TOTAL DEMAND AMPS:	**41 A**
Non-Continuous	800 VA	100.00%	800 VA		
Receptacle	9000 VA	100.00%	9000 VA		

NOTES:

BREAKER QUANTITIES (NEW ONLY)

(16) 20A / 1P

PANEL NAME: L2

SUPPLY FROM: L2D | MAINS RATING (A): 100 | FAULT CURRENT (A): 17837 | PHASE: Existing

LOCATION: ELECTRICAL/FIRE 105 | MAINS TYPE: THERMAL MAGNETIC | SHORT CIRCUIT RATING (A): 22000 | SURGE SUPRESSION:

DISTRIBUTION SYSTEM: 240/120V 1PH 3W | FEEDER ID: X100 | LUGS TYPE: | ULSE:

FEEDER: EXISTING FEEDER, AT RATING INDICATED, TO REMAIN UNLESS NOTED OTHERWISE | ENCLOSURE TYPE: | 200% NEUTRAL: | ISOLATED GROUND:

CKT	CIRCUIT DESCRIPTION	VD%	AWG	GND	TRIP	FRAME	POLE	A		B		POLE	FRAME	TRIP	GND	AWG	VD%	CIRCUIT DESCRIPTION	CKT
1	(#) CP | MOTOR JANITOR 106	0.115	#12	#12	20 A	20 A	1	0.11	0.21			1	20 A	20 A	#12	#12	0.241	(#) SHELL SPACE LIGHTING	2
3	(#) EWH-1 | HEATING ELECTRICAL/FIRE 105	1.024	#12	#12	20 A	20 A	1			1.50	0.54	1	20 A	20 A	#12	#12	0.578	(#) SHELL SPACE RECEPTACLES	4
5	(#) GFUH-1 | HEATING SHELL SPACE 131	0.607	#12	#12	20 A	20 A	1	0.29	0.54			1	20 A	20 A	#12	#12	1.288	(#) PHARMACY POWER	6
7	(#) NON-CONT. ELECTRICAL/FIRE 105	0.012	#12	#12	20 A	20 A	1			0.05	0.36	1	20 A	20 A	#12	#12	1.696	(#) ROOFTOP RECEPTACLES	8
9	(#) C1 C2 | NON-CONT. ELECTRICAL/FIRE 105	0.029	#12	#12	20 A	20 A	1	0.10	1.19			2	30 A	30 A	#10	#10	0.502	CU-1 | MOTOR	10
11	(#) RCPT 106,105	0.233	#12	#12	20 A	20 A	1			0.54	1.19								12
13	(G) UCR | MOTOR, RCPT CALL ROOM 123	0.902	#12	#12	20 A	20 A	1	0.98	0.36			1	20 A	20 A	#12	#12	0.533	(#) RCPT IT 125	14
15	(#)(L) FAA | CONTINUOUS RECEPTION 138	1.952	#12	#12	20 A	20 A	1			0.50	0.36	1	20 A	20 A	#12	#12	0.542	(#) RCPT IT 125	16
17	(#) PRINTER | RCPT, NON-CONT. LAB 121	2.471	#12	#12	20 A	20 A	1	0.68	0.36			1	20 A	20 A	#12	#12	0.539	(#) RCPT IT 125	18
19	(#) PRINTER | NON-CONT. CARE TEAM 1 146	0.876	#12	#12	20 A	20 A	1			0.50	0.36	1	20 A	20 A	#12	#12	0.531	(#) RCPT IT 125	20
21	(#)(L) FACP | NON-CONT. IT 125	0.681	#12	#12	20 A	20 A	1	0.50	0.72			1	20 A	20 A	#12	#12	0.858	(#) RCPT IT 125	22
23	(#) PRINTER | NON-CONT. CARE TEAM 2 149	1.835	#12	#12	20 A	20 A	1			0.50	0.00	1	20 A	20 A	--	--	--	(#) SPARE	24
25	(#) PRINTER | NON-CONT. CARE TEAM 2 149	1.406	#12	#12	20 A	20 A	1	0.50	0.00			1	20 A	20 A	--	--	--	(#) SPARE	26
27	(#) RCPT IT 125	0.459	#12	#12	20 A	20 A	1			0.36	0.00	1	20 A	20 A	--	--	--	(#) SPARE	28
29	(#) RCPT IT 125	0.467	#12	#12	20 A	20 A	1	0.36	0.00			1	20 A	20 A	--	--	--	(#) SPARE	30
							TOTAL CONNECTED LOAD:	6.9 kVA		6.8 kVA									

LOAD CLASSIFICATION	CONNECTED LOAD	DEMAND FACTOR	ESTIMATED DEMAND	PANEL TOTALS	
Continuous	0 VA	0.00%	0 VA	EXISTING CONNECTED LOAD:	
Cooling	0 VA	0.00%	0 VA	EXISTING LOAD DEMAND FACTOR:	
Elevator	0 VA	0.00%	0 VA	ADDED CONNECTED LOAD:	12653 VA
Heating	1788 VA	100.00%	1788 VA	DEMAND CALCULATION NOTES:	
Kitchen Equipment	0 VA	0.00%	0 VA		
Lighting	211 VA	125.00%	264 VA	TOTAL DEMAND:	14299.8 VA
Motor	3284 VA	118.09%	3878 VA	TOTAL DEMAND AMPS:	**60 A**
Non-Continuous	2150 VA	100.00%	2150 VA		
Receptacle	5220 VA	100.00%	5220 VA		

NOTES:

BREAKER QUANTITIES (NEW ONLY)

(1) 20A / 1P(G), (1) 30A / 2P

PANEL KEY

--	--	--
--	--	--
--	SL	L2

PANEL SCHEDULE LEGEND

*	=	WIRE SIZED TO COMPENSATE FOR VOLTAGE DROP
**	=	REFER TO DRAWINGS FOR SPECIFICATIONS
(#)	=	NEW CIRCUIT TO EXISTING CIRCUIT BREAKER
(->)	=	CONNECT BRANCH CIRCUIT, WHICH WAS DISCONNECTED FROM ANOTHER SOURCE AS PART OF SELECTIVE DEMOLITION, TO POLE SPACE(S) INDICATED, DETERMINE EXACT POLE ASSIGNMENT(S) BASED ON EXISTING COLOR-CODING OF THE BRANCH CIRCUIT CONDUCTOR INSULATION. PROVIDE NEW BREAKER IF REQUIRED.
(A)	=	PROVIDE ARC FAULT CIRCUIT INTERRUPTER (AFCI) CIRCUIT BREAKER
(AG)	=	PROVIDE COMBINATION ARC FAULT (AFCI) / GROUND FAULT (GFCI) CIRCUIT INTERRUPTER CIRCUIT BREAKER
(AT)	=	EXISTING FUSIBLE SWITCH/CIRCUIT BREAKER WITH NEW FUSES/TRIP RATING
(ERM)	=	PROVIDE ENERGY REDUCTION MAINTENANCE (REDUCED ENERGY) CIRCUIT BREAKER
(EX)	=	EXISTING CIRCUIT TO REMAIN
(F)	=	CIRCUIT FOR FURTURE USE. PROVIDE BREAKER INDICATED. LOAD SHOWN FOR REFERENCE ONLY.
(G)	=	PROVIDE GROUND-FAULT CIRCUIT INTERRUPTER (GFCI) CIRCUIT BREAKER
(GE)	=	PROVIDE GROUND-FAULT EQUIPMENT PROTECTION (GFEP) CIRCUIT BREAKER
(H)	=	PROVIDE HANDLE TIE
(L)	=	PROVIDE LOCK-ON DEVICE
(LI)	=	PROVIDE ELECTRONIC LONG AND INSTANTANEOUS ADJUSTABILITY
(LSI)	=	PROVIDE ELECTRONIC LONG, SHORT, AND INSTANTANEOUS ADJUSTABILITY
(LSIA)	=	PROVIDE ELECTRONIC LONG, SHORT, INSTANTANEOUS, AND GROUND-FAULT ALARM ADJUSTABILITY
(LSIG)	=	PROVIDE ELECTRONIC LONG, SHORT, INSTANTANEOUS, AND GROUND-FAULT ADJUSTABILITY
(LT)	=	PROVIDE LOCK-OUT/TAG-OUT DEVICE
SL	=	SEE THE SINGLE LINE DIAGRAM / SCHEDULE FOR WIRE SIZE AND VOLTAGE DROP
(ST)	=	PROVIDE SHUNT TRIP CIRCUIT BREAKER

PANEL SCHEDULE GENERAL NOTES

A. PROVIDE HACR RATED BREAKERS ON ALL MOTOR LOADS.

B. ALL CONDUCTORS SHOWN ARE COPPER.

C. ALL VOLTAGE DROP CALCULATIONS AND COMPENSATED WIRE SIZES ARE BASED ON RIGHT ANGLE CIRCUIT LENGTHS. ACTUAL VOLTAGE DROP MAY VARY BASED ON INSTALLED WIRE LENGTH.

D. VOLTAGE DROP CALCULATIONS AND WIRE SIZES SHOWN IN THE PANEL SCHEDULES ARE FOR HOMERUN CONDUCTORS ONLY. FOR CIRCUITS WITH MORE THAN 1 DEVICE, THESE SIZES ASSUME THE CONDUCTORS DOWNSTREAM OF THE HOMERUN DEVICE ARE THE MINIMUM SIZE REQUIRED BY THE NEC BASED ON THE RATING OF THE CIRCUIT. WHERE THIS IS NOT THE CASE, IT HAS BEEN INDICATED ON THE DRAWINGS. VOLTAGE DROP TO THE FARTHEST DEVICE HAS BEEN CALCULATED TO NEVER EXCEED 5%.

E. RECEPTACLE LOADS CALCULATED AT 100% OF FIRST 10kVA, 50% OF REMAINDER. MOTOR LOADS CALCULATED AT 125% OF THE LARGEST MOTOR, 100% OF ALL OTHER MOTORS.

KLH ENGINEERS

MECHANICAL/ELECTRICAL ENGINEERS

WWW.KLHENGRS.COM

LEXINGTON, KENTUCKY
LOUISVILLE, KENTUCKY
COLUMBUS, OHIO
NEW YORK, NEW YORK
KLH #: 25588

KOHRS LONNEMANN HEIL ENGINEERS, INC.
1538 ALEXANDRIA PIKE, SUITE 11
FT. THOMAS, KENTUCKY 41075
800-354-9783 859-442-8050
859-442-8058 FAX

Project

Oak St. Health

520 PENN AVENUE,
WILKINSBURG, PA

Architect

MOODY•NOLAN

300 Spruce Street
Suite 300
Columbus, Ohio 43215

Phone: (614) 461-4664
Fax: (614) 280-8881
www.moodynolan.com

Seal:

COMMONWEALTH OF PENNSYLVANIA
REGISTERED PROFESSIONAL
JAMES S. TAVERNELLI
ENGINEER
PE-082782

9/27/2023

Versions

No.	Date	Description

Sheet Title

ELECTRIC POWER - PANEL SCHEDULES

Issue Date: 09/05/2023

Drawn: Author | Project No.: 25588

Sheet No.

EP603

COM*check* Software Version 4.1.5.3

Interior Lighting Compliance Certificate

Project Information

Energy Code: 90.1 (2016) Standard
Project Title: OAK STREET HEALTH - WILKINSBURG
Project Type: Alteration

Construction Site:
520 PENN AVE
WILKINSBURG, PA

Owner/Agent:

Designer/Contractor:
KLH Engineers
1538 Alexandria Pike
Fort Thomas, KY 41075

Allowed Interior Lighting Power

A Area Category	B Floor Area (ft2)	C Allowed Watts / ft2	D Allowed Watts (B X C)
20-CLINIC RESTROOM (Common Space Types:Restrooms)	69	0.85	59
21-LAB (Healthcare Facility:Pharmacy)	120	1.34	161
22-OUTREACH STORAGE (Common Space Types:Storage >=50 - <=1000 sq.ft.)	53	0.46	24
19-EXAM 1 (Healthcare Facility:Exam/Treatment)	99	1.68	166
16-BARIATRIC EXAM ROOM 14 (Healthcare Facility:Exam/Treatment)	115	1.68	193
17-OFFICE 1 (Common Space Types:Office - Enclosed)	90	0.93	84
18-OFFICE 2 (Common Space Types:Office - Enclosed)	91	0.93	85
27-EXAM 4 (Healthcare Facility:Exam/Treatment)	95	1.68	160
28-CONSULT (Common Space Types:Office - Enclosed)	100	0.93	93
29-EXAM 8 (Healthcare Facility:Exam/Treatment)	93	1.68	156
26-EXAM 5 (Healthcare Facility:Exam/Treatment)	95	1.68	160
23-CALL ROOM (Common Space Types:Office - Enclosed)	65	0.93	60
24-EXAM 13 (Healthcare Facility:Exam/Treatment)	93	1.68	156
25-IT (Common Space Types:Electrical/Mechanical)	56	0.43	24
15-EXAM 12 (Healthcare Facility:Exam/Treatment)	93	1.68	156
5-ELECTRICAL/FIRE (Common Space Types:Electrical/Mechanical)	127	0.43	55
6-JANITOR (Common Space Types:Electrical/Mechanical)	46	0.43	20
7-BREAK ROOM (Common Space Types:Lounge/Breakroom)	198	0.62	123
4-EXAM 7 (Healthcare Facility:Exam/Treatment)	93	1.68	156
1-COATS 101 (Common Space Types:Storage <50 sq.ft.)	7	0.97	7
2-FUTURE PHARMACY (Healthcare Facility:Pharmacy)	654	1.34	876
3-EXAM 6 (Healthcare Facility:Exam/Treatment)	93	1.68	156
12-OFFICE 3 (Common Space Types:Office - Enclosed)	90	0.93	84
13-MEN'S RESTROOM (Common Space Types:Restrooms)	131	0.85	111
14-WOMEN'S RESTROOM (Common Space Types:Restrooms)	150	0.85	128
11-EXAM 10 (Healthcare Facility:Exam/Treatment)	93	1.68	156
8-EXAM 3 (Healthcare Facility:Exam/Treatment)	95	1.68	160
9-EXAM 2 (Healthcare Facility:Exam/Treatment)	95	1.68	160
10-EXAM 11 (Healthcare Facility:Exam/Treatment)	93	1.68	156
45-AISLE 3 (Common Space Types:Corridor/Transition <8 ft wide)	212	0.66	140
46-AISLE 2 (Common Space Types:Corridor/Transition <8 ft wide)	232	0.66	153
47-AISLE 1 (Common Space Types:Corridor/Transition <8 ft wide)	304	0.66	201
42-HALLWAY (Common Space Types:Corridor/Transition <8 ft wide)	133	0.66	88
43-AISLE 4 (Common Space Types:Corridor/Transition <8 ft wide)	273	0.66	180

A Area Category	B Floor Area (ft2)	C Allowed Watts / ft2	D Allowed Watts (B X C)
44-HALLWAY (Common Space Types:Corridor/Transition <8 ft wide)	214	0.66	141
51-HALLWAY (Common Space Types:Corridor/Transition <8 ft wide)	134	0.66	88
52-COATS 152 (Common Space Types:Storage <50 sq.ft.)	9	0.97	9
48-CARE TEAM 1 (Common Space Types:Office - Open Plan)	454	0.81	368
49-MEDICAL STORAGE (Common Space Types:Storage <50 sq.ft.)	46	0.97	45
50-CARE TEAM 3 (Common Space Types:Office - Open Plan)	127	0.81	103
33-EMPLOYEE RESTROOM (Common Space Types:Restrooms)	59	0.85	50
34-RW (Common Space Types:Storage <50 sq.ft.)	19	0.97	18
35-CARE TEAM 2 (Common Space Types:Office - Open Plan)	441	0.81	357
30-EXAM 9 (Healthcare Facility:Exam/Treatment)	92	1.68	155
31-SHELL SPACE (Common Space Types:Storage >=1000 sq.ft.)	1308	0.46	602
32-SUPPLY STORAGE (Common Space Types:Storage >=50 - <=1000 sq.ft.)	75	0.46	34
39-COMMUNITY ROOM (Common Space Types:Lounge/Breakroom)	732	0.62	454
40-RECEPTION (Common Space Types:Lobby - General)	831	1.00	831
41-EXISTING VESTIBULE (Common Space Types:Corridor/Transition <8 ft wide)	113	0.66	75
36-ENROLLMENT (Common Space Types:Office - Enclosed)	90	0.93	84
37-OUTREACH (Common Space Types:Office - Enclosed)	152	0.93	141
38-CONFERENCE (Common Space Types:Conference/Meeting/Multipurpose)	172	1.07	184
		Total Allowed Watts =	8585

Proposed Interior Lighting Power

A Fixture ID : Description / Lamp / Wattage Per Lamp / Ballast	B Lamps/ Fixture	C # of Fixtures	D Fixture Watt.	E (C X D)
CLINIC RESTROOM (Common Space Types:Restrooms 69 sq.ft.)				
F1: F1: 2X4 LAYIN: Other:	1	1	48	48
LAB (Healthcare Facility:Pharmacy 120 sq.ft.)				
F1: F1: 2X4 LAYIN: Other:	1	2	48	96
OUTREACH STORAGE (Common Space Types:Storage >=50 - <=1000 sq.ft. 53 sq.ft.)				
F1: F1: 2X4 LAYIN: Other:	1	1	48	48
EXAM 1 (Healthcare Facility:Exam/Treatment 99 sq.ft.)				
F1: F1: 2X4 LAYIN: Other:	1	2	48	96
BARIATRIC EXAM ROOM 14 (Healthcare Facility:Exam/Treatment 115 sq.ft.)				
F1: F1: 2X4 LAYIN: Other:	1	2	48	96
OFFICE 1 (Common Space Types:Office - Enclosed 90 sq.ft.)				
F1: F1: 2X4 LAYIN: Other:	1	2	48	96
OFFICE 2 (Common Space Types:Office - Enclosed 91 sq.ft.)				
F1: F1: 2X4 LAYIN: Other:	1	2	48	96
EXAM 4 (Healthcare Facility:Exam/Treatment 95 sq.ft.)				
F1: F1: 2X4 LAYIN: Other:	1	2	48	96
CONSULT (Common Space Types:Office - Enclosed 100 sq.ft.)				
F1: F1: 2X4 LAYIN: Other:	1	2	48	96
EXAM 8 (Healthcare Facility:Exam/Treatment 93 sq.ft.)				
F1: F1: 2X4 LAYIN: Other:	1	2	48	96
EXAM 5 (Healthcare Facility:Exam/Treatment 95 sq.ft.)				
F1: F1: 2X4 LAYIN: Other:	1	2	48	96
CALL ROOM (Common Space Types:Office - Enclosed 65 sq.ft.)				
F1: F1: 2X4 LAYIN: Other:	1	1	48	48

A Fixture ID : Description / Lamp / Wattage Per Lamp / Ballast	B Lamps/ Fixture	C # of Fixtures	D Fixture Watt.	E (C X D)
EXAM 13 (Healthcare Facility:Exam/Treatment 93 sq.ft.)				
F1: F1: 2X4 LAYIN: Other:	1	2	48	96
IT (Common Space Types:Electrical/Mechanical 56 sq.ft.)				
LF: LF: STRIP LIGHT: Other:	1	1	15	15
EXAM 12 (Healthcare Facility:Exam/Treatment 93 sq.ft.)				
F1: F1: 2X4 LAYIN: Other:	1	2	48	96
ELECTRICAL/FIRE (Common Space Types:Electrical/Mechanical 127 sq.ft.)				
LF: LF: STRIP LIGHT-EMERGENCY: Other:	1	1	15	15
LFE: LFE: STRIP LIGHT-EMERGENCY: Other:	1	1	15	15
JANITOR (Common Space Types:Electrical/Mechanical 46 sq.ft.)				
LF: LF: STRIP LIGHT: Other:	1	1	15	15
BREAK ROOM (Common Space Types:Lounge/Breakroom 198 sq.ft.)				
F1: F1: 2X4 LAYIN: Other:	1	2	48	96
F1E: F1E: 2X4 LAYIN-EMERGENCY: Other:	1	1	48	48
EXAM 7 (Healthcare Facility:Exam/Treatment 93 sq.ft.)				
F1: F1: 2X4 LAYIN: Other:	1	2	48	96
COATS 101 (Common Space Types:Storage <50 sq.ft. 7 sq.ft.)				
LF: LF: STRIP LIGHT: Other:	1	1	15	15
FUTURE PHARMACY (Healthcare Facility:Pharmacy 654 sq.ft.)				
LF: LF: STRIP LIGHT: Other:	1	2	15	30
LFE: LFE: STRIP LIGHT-EMERGENCY: Other:	1	1	15	15
EXAM 6 (Healthcare Facility:Exam/Treatment 93 sq.ft.)				
F1: F1: 2X4 LAYIN: Other:	1	2	48	96
OFFICE 3 (Common Space Types:Office - Enclosed 90 sq.ft.)				
F1: F1: 2X4 LAYIN: Other:	1	2	48	96
MEN'S RESTROOM (Common Space Types:Restrooms 131 sq.ft.)				
F2: F2: 4 RECESSED DOWNLIGHT: Other:	1	6	14	84
F2E: F2E: 4 RECESSED DOWNLIGHT: Other:	1	1	14	14
WOMEN'S RESTROOM (Common Space Types:Restrooms 150 sq.ft.)				
F2: F2: 4 RECESSED DOWNLIGHT: Other:	1	6	14	84
F2E: F2E: 4 RECESSED DOWNLIGHT: Other:	1	1	14	14
EXAM 10 (Healthcare Facility:Exam/Treatment 93 sq.ft.)				
F1: F1: 2X4 LAYIN: Other:	1	2	48	96
EXAM 3 (Healthcare Facility:Exam/Treatment 95 sq.ft.)				
F1: F1: 2X4 LAYIN: Other:	1	2	48	96
EXAM 2 (Healthcare Facility:Exam/Treatment 95 sq.ft.)				
F1: F1: 2X4 LAYIN: Other:	1	2	48	96
EXAM 11 (Healthcare Facility:Exam/Treatment 93 sq.ft.)				
F1: F1: 2X4 LAYIN: Other:	1	2	48	96
AISLE 3 (Common Space Types:Corridor/Transition <8 ft wide 212 sq.ft.)				
F1: F1: 2X4 LAYIN: Other:	1	3	48	144
F1E: F1E: 2X4 LAYIN-EMERGENCY: Other:	1	1	48	48
AISLE 2 (Common Space Types:Corridor/Transition <8 ft wide 232 sq.ft.)				
F1: F1: 2X4 LAYIN: Other:	1	2	48	96
F1E: F1E: 2X4 LAYIN-EMERGENCY: Other:	1	2	48	96
AISLE 1 (Common Space Types:Corridor/Transition <8 ft wide 304 sq.ft.)				
F1: F1: 2X4 LAYIN: Other:	1	3	48	144
F1E: F1E: 2X4 LAYIN-EMERGENCY: Other:	1	1	48	48
HALLWAY (Common Space Types:Corridor/Transition <8 ft wide 133 sq.ft.)				
F1: F1: 2X4 LAYIN: Other:	1	1	48	48
F1E: F1E: 2X4 LAYIN-EMERGENCY: Other:	1	1	48	48
AISLE 4 (Common Space Types:Corridor/Transition <8 ft wide 273 sq.ft.)				

A Fixture ID : Description / Lamp / Wattage Per Lamp / Ballast	B Lamps/ Fixture	C # of Fixtures	D Fixture Watt.	E (C X D)
F1: F1: 2X4 LAYIN: Other:	1	2	48	96
F1E: F1E: 2X4 LAYIN-EMERGENCY: Other:	1	2	48	96
HALLWAY (Common Space Types:Corridor/Transition <8 ft wide 214 sq.ft.)				
F1: F1: 2X4 LAYIN: Other:	1	3	48	144
F1E: F1E: 2X4 LAYIN-EMERGENCY: Other:	1	1	48	48
HALLWAY (Common Space Types:Corridor/Transition <8 ft wide 134 sq.ft.)				
F2: F2: 4 RECESSED DOWNLIGHT: Other:	1	3	14	42
F2E: F2E: 4 RECESSED DOWNLIGHT: Other:	1	1	14	14
COATS 152 (Common Space Types:Storage <50 sq.ft. 9 sq.ft.)				
LF: LF: STRIP LIGHT: Other:	1	1	15	15
CARE TEAM 1 (Common Space Types:Office - Open Plan 454 sq.ft.)				
F2: F2: 4 RECESSED DOWNLIGHT: Other:	1	3	14	42
F1: F1: 2X4 LAYIN: Other:	1	5	48	240
F1E: F1E: 2X4 LAYIN-EMERGENCY: Other:	1	1	48	48
MEDICAL STORAGE (Common Space Types:Storage <50 sq.ft. 46 sq.ft.)				
F1: F1: 2X4 LAYIN: Other:	1	1	48	48
CARE TEAM 3 (Common Space Types:Office - Open Plan 127 sq.ft.)				
F1: F1: 2X4 LAYIN: Other:	1	1	48	48
F1E: F1E: 2X4 LAYIN-EMERGENCY: Other:	1	1	48	48
EMPLOYEE RESTROOM (Common Space Types:Restrooms 59 sq.ft.)				
F1: F1: 2X4 LAYIN: Other:	1	1	48	48
RW (Common Space Types:Storage <50 sq.ft. 19 sq.ft.)				
LF: LF: STRIP LIGHT: Other:	1	1	15	15
CARE TEAM 2 (Common Space Types:Office - Open Plan 441 sq.ft.)				
F2: F2: 4 RECESSED DOWNLIGHT: Other:	1	5	14	70
F1: F1: 2X4 LAYIN: Other:	1	5	48	240
F1E: F1E: 2X4 LAYIN-EMERGENCY: Other:	1	1	48	48
EXAM 9 (Healthcare Facility:Exam/Treatment 92 sq.ft.)				
F1: F1: 2X4 LAYIN: Other:	1	2	48	96
SHELL SPACE (Common Space Types:Storage >=1000 sq.ft. 1308 sq.ft.)				
LF: LF: STRIP LIGHT: Other:	1	10	15	150
LFE: LFE: STRIP LIGHT-EMERGENCY: Other:	1	4	15	60
SUPPLY STORAGE (Common Space Types:Storage >=50 - <=1000 sq.ft. 75 sq.ft.)				
F1: F1: 2X4 LAYIN: Other:	1	1	48	48
COMMUNITY ROOM (Common Space Types:Lounge/Breakroom 732 sq.ft.)				
F2: F2: 4 RECESSED DOWNLIGHT: Other:	1	22	14	308
F2E: F2E: 4 RECESSED DOWNLIGHT: Other:	1	5	14	70
RECEPTION (Common Space Types:Lobby - General 831 sq.ft.)				
F2: F2: 4 RECESSED DOWNLIGHT: Other:	1	17	14	238
F2E: F2E: 4 RECESSED DOWNLIGHT: Other:	1	5	14	70
EXISTING VESTIBULE (Common Space Types:Corridor/Transition <8 ft wide 113 sq.ft.)				
F2E: F2E: 4 RECESSED DOWNLIGHT: Other:	1	1	14	14
LF: LF: STRIP LIGHT: Other:	1	2	15	30
ENROLLMENT (Common Space Types:Office - Enclosed 90 sq.ft.)				
F1: F1: 2X4 LAYIN: Other:	1	2	48	96
OUTREACH (Common Space Types:Office - Enclosed 152 sq.ft.)				
F1: F1: 2X4 LAYIN: Other:	1	2	48	96
F1E: F1E: 2X4 LAYIN-EMERGENCY: Other:	1	1	48	48
CONFERENCE (Common Space Types:Conference/Meeting/Multipurpose 172 sq.ft.)				
F1: F1: 2X4 LAYIN: Other:	1	2	48	96
F1E: F1E: 2X4 LAYIN-EMERGENCY: Other:	1	1	48	48
		Total Proposed Watts =		5822

Interior Lighting PASSES

Interior Lighting Compliance Statement

Compliance Statement: The proposed interior lighting alteration project represented in this document is consistent with the building plans, specifications, and other calculations submitted with this permit application. The proposed interior lighting systems have been designed to meet the 90.1 (2016) Standard requirements in COM*check* Version 4.1.5.3 and to comply with any applicable mandatory requirements listed in the Inspection Checklist.

Name - Title Signature Date

COM*check* Software Version 4.1.5.3

Inspection Checklist

Energy Code: 90.1 (2016) Standard

Requirements: 100.0% were addressed directly in the COM*check* software

Text in the "Comments/Assumptions" column is provided by the user in the COMcheck Requirements screen. For each requirement, the user certifies that a code requirement will be met and how that is documented, or that an exception is being claimed. Where compliance is itemized in a separate table, a reference to that table is provided.

Section # & Req.ID	Plan Review	Complies?	Comments/Assumptions
4.2.2, 8.4.1.1, 8.4.1.2, 8.7 [PR6][1]	Plans, specifications, and/or calculations provide all information with which compliance can be determined for the electrical systems and equipment and document where exceptions are claimed. Feeder connectors sized in accordance with approved plans and branch circuits sized for maximum drop of 3%.	☐Complies ☐Does Not ☐Not Observable ☐Not Applicable	Requirement will be met.
4.2.2, 9.4.3, 9.7 [PR4][1]	Plans, specifications, and/or calculations provide all information with which compliance can be determined for the interior lighting and electrical systems and equipment and document where exceptions to the standard are claimed. Information provided should include interior lighting power calculations, wattage of bulbs and ballasts, transformers and control devices.	☐Complies ☐Does Not ☐Not Observable ☐Not Applicable	Requirement will be met.

Additional Comments/Assumptions:

1 High Impact (Tier 1) 2 Medium Impact (Tier 2) 3 Low Impact (Tier 3)

Section # & Req.ID	Rough-In Electrical Inspection	Complies?	Comments/Assumptions
8.4.2 [EL10][1]	At least 50% of all 125 volt 15- and 20-Amp receptacles are controlled by an automatic control device.	☐Complies ☐Does Not ☐Not Observable ☐Not Applicable	Requirement will be met.
8.4.3 [EL11][1]	New buildings have electrical energy use measurement devices installed. Where tenant spaces exist, each tenant is monitored separately. In buildings with a digital control system the energy use is transmitted to to control system and displayed graphically.	☐Complies ☐Does Not ☐Not Observable ☐Not Applicable	**Exception:** Buildings 25,000 ft2.
9.4.1.1 [EL1][1]	Automatic control requirements prescribed in Table 9.6.1, for the appropriate space type, are installed. Mandatory lighting controls (labeled as 'REQ') and optional choice controls (labeled as 'ADD1' and 'ADD2') are implemented.	☐Complies ☐Does Not ☐Not Observable ☐Not Applicable	Requirement will be met.
9.4.1.1 [EL2][1]	Independent lighting controls installed per approved lighting plans and all manual controls readily accessible and visible to occupants.	☐Complies ☐Does Not ☐Not Observable ☐Not Applicable	Requirement will be met.
9.4.1.1f [EL13][1]	Daylight areas under skylights and roof monitors that have more than 150 W combined input power for general lighting are controlled by photocontrols.	☐Complies ☐Does Not ☐Not Observable ☐Not Applicable	**Exception:** Requirement does not apply.
9.4.1.3 [EL4][1]	Separate lighting control devices for specific uses installed per approved lighting plans.	☐Complies ☐Does Not ☐Not Observable ☐Not Applicable	Requirement will be met.
9.6.2 [EL8][1]	Additional interior lighting power allowed for special functions per the approved lighting plans and is automatically controlled and separated from general lighting.	☐Complies ☐Does Not ☐Not Observable ☐Not Applicable	Requirement will be met.

Additional Comments/Assumptions:

1 High Impact (Tier 1) 2 Medium Impact (Tier 2) 3 Low Impact (Tier 3)

Section # & Req.ID	Final Inspection	Complies?	Comments/Assumptions
8.7.1 [FI16][1]	Furnished as-built drawings for electric power systems within 30 days of system acceptance.	☐Complies ☐Does Not ☐Not Observable ☐Not Applicable	Requirement will be met.
8.7.2 [FI17][1]	Furnished O&M instructions for systems and equipment to the building owner or designated representative.	☐Complies ☐Does Not ☐Not Observable ☐Not Applicable	Requirement will be met.
9.2.2.3 [FI18][1]	Interior installed lamp and fixture lighting power is consistent with what is shown on the approved lighting plans, demonstrating proposed watts are less than or equal to allowed watts.	☐Complies ☐Does Not ☐Not Observable ☐Not Applicable	*See the Interior Lighting fixture schedule for values.*
9.4.4 [FI20][1]	At least 75% of all permanently installed lighting fixtures in dwelling units have >= 55 lm/W efficacy or a >= 45 lm/W total luminaire efficacy.	☐Complies ☐Does Not ☐Not Observable ☐Not Applicable	**Exception:** Requirement does not apply.

Additional Comments/Assumptions:

1 High Impact (Tier 1) 2 Medium Impact (Tier 2) 3 Low Impact (Tier 3)

MECHANICAL/ELECTRICAL ENGINEERS
WWW.KLHENGRS.COM
LEXINGTON, KENTUCKY
LOUISVILLE, KENTUCKY
COLUMBUS, OHIO
NEW YORK, NEW YORK
KLH #: 25588

KLH ENGINEERS
KOHRS LONNEMANN HEIL ENGINEERS, INC.
1538 ALEXANDRIA PIKE, SUITE 11
FT. THOMAS, KENTUCKY 41075
859-442-8050 859-442-8060
859-442-8058 FAX

Project

Oak St. Health

520 PENN AVENUE,
WILKINSBURG, PA

Architect

MOODY•NOLAN
300 Spruce Street Phone: (614) 461-4664
Suite 300 Fax: (614) 280-8881
Columbus, Ohio 43215 www.moodynolan.com

Seal:

COMMONWEALTH OF PENNSYLVANIA
REGISTERED PROFESSIONAL
JAMES S. TAVERNELLI
ENGINEER
PE-082782
9/27/2023

Versions

No.	Date	Description

Sheet Title

ELECTRIC ENERGY COMPLIANCE

Issue Date: 09/05/2023

Drawn: KLH
Project No.: 25588

Sheet No.

EP604

FIRE PROTECTION LEGEND

SYMBOL	DESCRIPTION
PIPING LINE TYPES	
(faded line)	WORK SHOWN FADED INDICATES EXISTING WORK TO REMAIN OR NEW WORK BY OTHERS AS APPLICABLE
(bold line)	WORK SHOWN BOLD-CONTINUOUS INDICATES NEW WORK
DRAWING SET APPEARANCE	
TO BETTER COMMUNICATE SCOPE TO PERMIT AGENCIES AND CONTRACTORS, EACH DRAWING IN THIS DRAWING SET HAS BEEN CREATED IN BOTH "COLOR" AND "BLACK AND WHITE". THERE EXISTS A COLOR LAYER WITHIN EACH DRAWING WHERE VISIBILITY IS CONTROLLED THROUGH THE PDF LAYER MANAGER. THIS LAYER VISIBILITY CAN BE TOGGLED DISPLAYING EITHER "COLOR" OR "BLACK AND WHITE". TO MAINTAIN SCOPE BASED SHADING WHEN PRINTING TO PAPER, BLACK AND WHITE NEEDS TO BE VISIBLE. FOR FURTHER INSTRUCTIONS, REFER TO CONTRACTOR RESOURCES ON OUR WEBSITE AND DOWNLOAD "DRAWING COLOR INSTRUCTIONS". WWW.KLHENGRS.COM - CONTRACTOR RESOURCES (RIGHT HAND SIDE OF PAGE).	
SPRINKLER HEAD TYPES	
N, X, D	SPRINKLER TAG (NEW, EXISTING TO REMAIN, DEMOLITION)
●	CONCEALED WHITE PLATE SPRINKLER
○	BRASS UPRIGHT SPRINKLER
HAZARD OCCUPANCY	
LH	LIGHT HAZARD OCCUPANCY
OH1	ORDINARY HAZARD OCCUPANCY GROUP 1
OH2	ORDINARY HAZARD OCCUPANCY GROUP 2

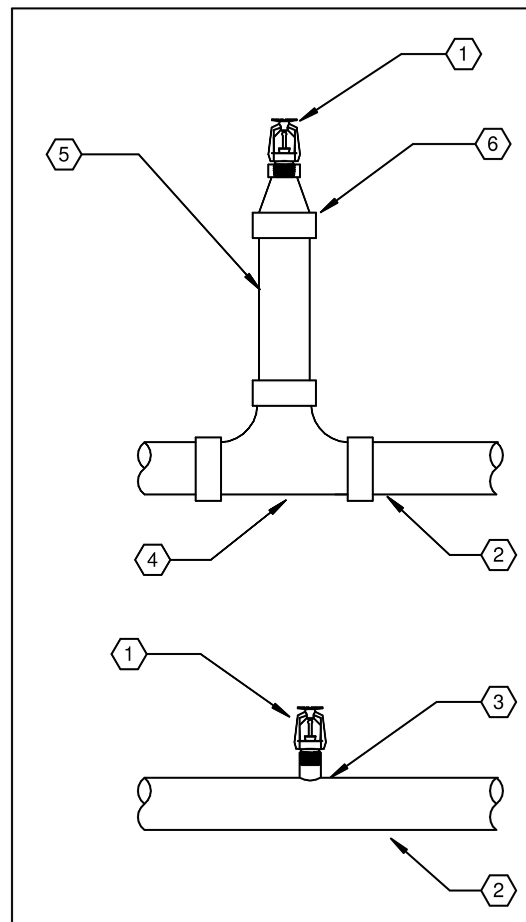

KEYED NOTES:
1. NEW UPRIGHT SPRINKLER.
2. BRANCHLINE OR MAIN.
3. THREADED OUTLET.
4. NEW TEE.
5. NEW SPRIG.
6. NEW REDUCER COUPLING.

211313.00-06 - UPRIGHT SPRINKLER DETAIL

SCALE: NONE

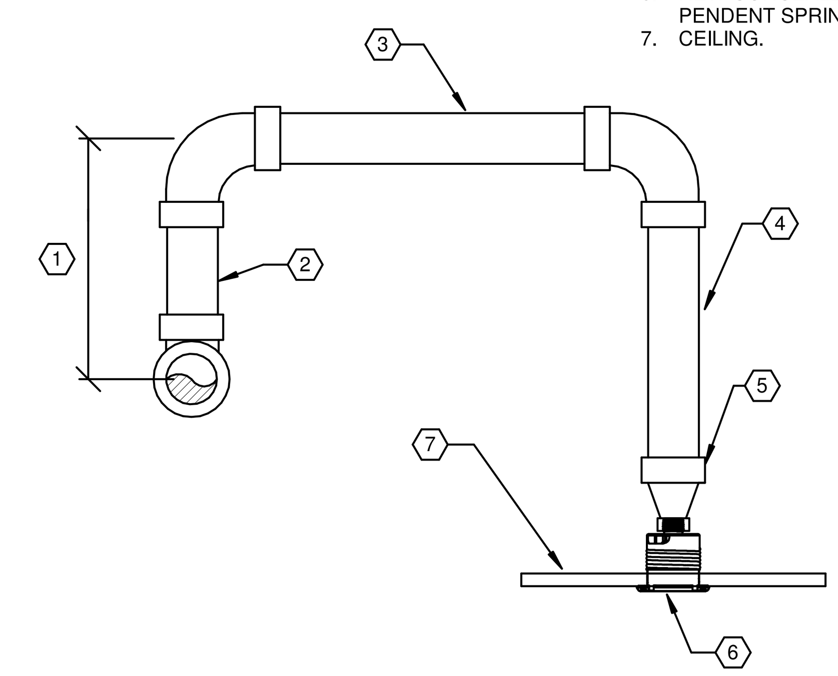

KEYED NOTES:
1. 4" MINIMUM.
2. NEW RISE FROM OUTLET.
3. PIPE TO NEW SPRINKLER LOCATION.
4. NEW DROP.
5. NEW RC.
6. NEW CONCEALED PENDENT SPRINKLER.
7. CEILING.

211313.00-16 - PIPE ARMOVER CONCEALED PENDENT

SCALE: NONE

KLH ENGINEERS

KOHRS LONNEMANN HEIL ENGINEERS, INC.
1538 ALEXANDRIA PIKE, SUITE 11
FT. THOMAS, KENTUCKY 41075
800-354-9783 859-442-8050
859-442-8058 FAX

MECHANICAL/ELECTRICAL ENGINEERS

WWW.KLHENGRS.COM

LEXINGTON, KENTUCKY
LOUISVILLE, KENTUCKY
COLUMBUS, OHIO
NEW YORK, NEW YORK
KLH #: 25588

Project

Oak St. Health

520 PENN AVENUE, WILKINSBURG, PA

Architect

MOODY•NOLAN

300 Spruce Street
Suite 300
Columbus, Ohio 43215

Phone: (614) 461-4664
Fax: (614) 280-8881
www.moodynolan.com

Seal:

COMMONWEALTH OF PENNSYLVANIA
REGISTERED PROFESSIONAL
KRIS SCHNITGEN
ENGINEER
PE-087168

9/27/2023

Versions

No.	Date	Description

Sheet Title

FIRE PROTECTION COVER SHEET

Issue Date: 09/05/2023

Drawn: JLI

Project No. 25588

Sheet No.

F-001

GENERAL FIRE PROTECTION NOTES

A. RENOVATED AREAS SHALL BE 100% SPRINKLERED.
B. COORDINATE CLOSELY WITH OTHER TRADES. REFER TO ARCHITECTURAL DRAWINGS FOR CEILING TYPES.
C. ALL SPRINKLER WORK SHALL BE INSTALLED PER NFPA 13, BUILDING CODE, AND OWNER'S INSURANCE CARRIER REQUIREMENTS.
D. MAKE PROVISIONS FOR DRAINING AND PROVIDE INSPECTOR TESTS AS REQUIRED. ALL DRAIN PIPING SHALL BE PIPED TO OUTSIDE OR INDIRECTLY TO SINK OR FLOOR DRAIN.
E. COORDINATE EXACT LOCATION OF PIPING AND HEADS WITH REFLECTED CEILING PLANS, MECHANICAL AND ELECTRICAL DRAWINGS.
F. ALL HOSE VALVES AND FIRE DEPARTMENT CONNECTIONS SHALL MATCH LOCAL FIRE DEPARTMENT THREADS.
G. ALL FIRE SUPPRESSION WORK SHALL BE PERFORMED BY A FIRE PROTECTION CONTRACTOR LICENSED IN THE STATE OF PENNSYLVANIA.
H. ALL SPRINKLER HEADS SHALL BE LOCATED IN CENTER OF CEILING TILE. PLUS OR MINUS ONE HALF INCH.
I. SPRINKLER CONTRACTOR SHALL BE RESPONSIBLE FOR ALL CUTTING AND PATCHING FOR SPRINKLER WORK IN ALL AREAS OF BUILDING. REFER TO SPECIFICATIONS.
J. ALL ARMOVER PIPING RELATED TO SPRINKLERS TO BE DEMOLISHED, SHALL HAVE ALL PIPING REMOVED BACK TO THE OUTLET ON THE BRANCHLINE.
K. WHEN MODIFYING EXISTING SPRINKLER SYSTEMS, SPRINKLER CONTRACTOR SHALL MAINTAIN THE INTEGRITY OF THE EXISTING SPRINKLER ZONES. COORDINATE WITH NEW FIRE RATING PLANS AS NEEDED.
L. FIRE PROTECTION CONTRACTOR IS REQUIRED TO RAISE/REWORK ALL EXISTING PIPING AS NEEDED TO ACCOMMODATE NEW CEILINGS AND HIGHER CEILING HEIGHTS AS APPLICABLE.

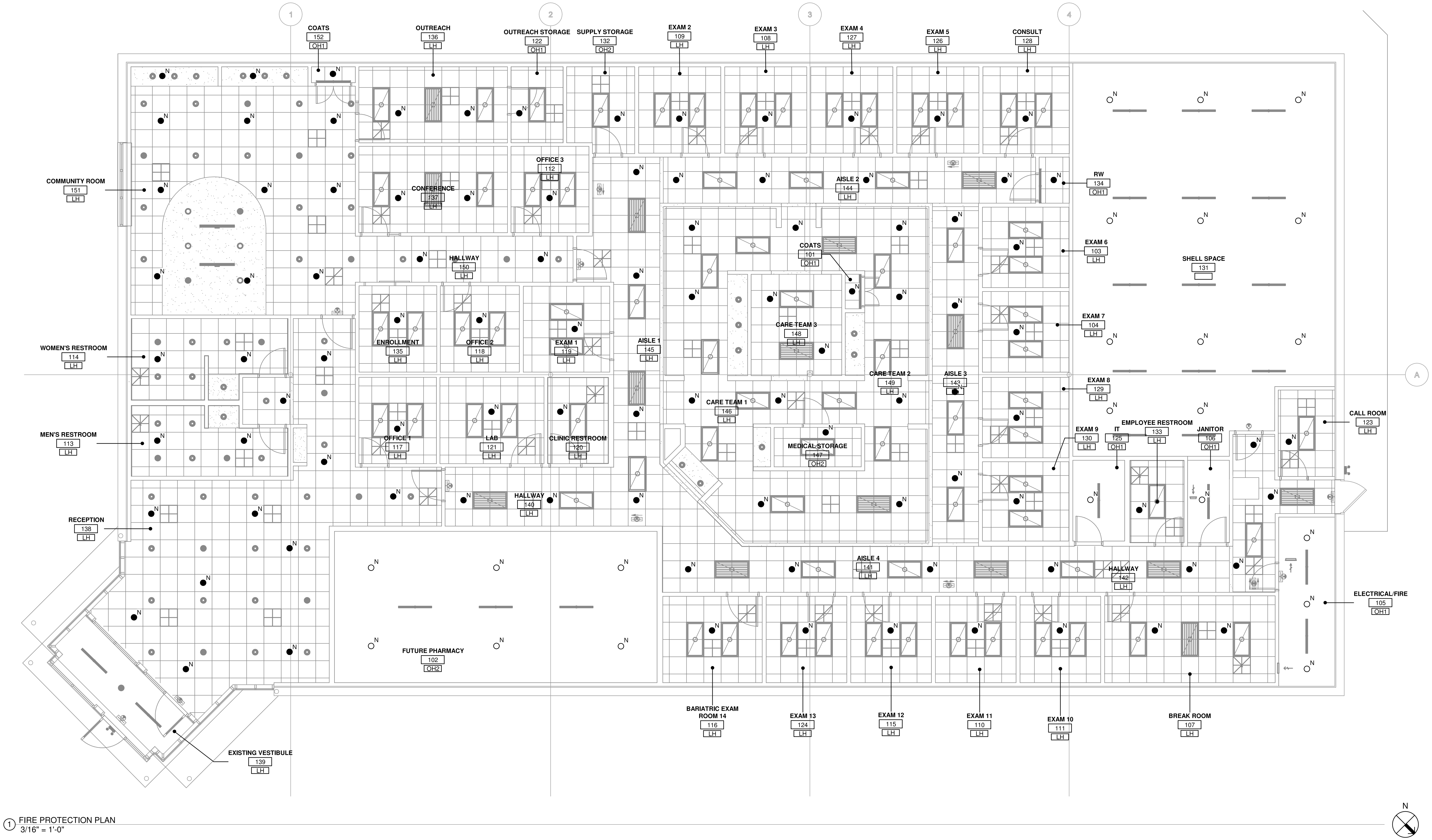

1 FIRE PROTECTION PLAN
3/16" = 1'-0"

KLH ENGINEERS
KOHRS LONNEMANN HEIL ENGINEERS, INC.
1538 ALEXANDRIA PIKE, SUITE 11
FT. THOMAS, KENTUCKY 41075
800-354-9783 859-442-8050
859-442-8058 FAX
MECHANICAL/ELECTRICAL ENGINEERS
WWW.KLHENGRS.COM
LEXINGTON, KENTUCKY
LOUISVILLE, KENTUCKY
COLUMBUS, OHIO
NEW YORK, NEW YORK
KLH #: 25588

Project

Oak St. Health
520 PENN AVENUE,
WILKINSBURG, PA

Architect
MOODY•NOLAN
300 Spruce Street
Suite 300
Columbus, Ohio 43215
Phone: (614) 461-4664
Fax: (614) 280-8881
www.moodynolan.com

Seal:
COMMONWEALTH OF PENNSYLVANIA
REGISTERED PROFESSIONAL
KRIS SCHNITGEN
ENGINEER
PE-087168
9/27/2023

Versions

No.	Date	Description

Sheet Title

FIRE PROTECTION PLAN

Issue Date: 09/05/2023

Drawn JLI

Project No. 25588

Sheet No.

F-101

MECHANICAL LEGEND

SYMBOL	DESCRIPTION
PLAN-VIEW LINE TYPES	
	WORK SHOWN FADED INDICATES EXISTING WORK TO REMAIN OR NEW WORK BY OTHERS AS APPLICABLE
	WORK SHOWN BOLD-DASHED INDICATES SELECTIVE DEMOLITION WORK
	WORK SHOWN BOLD-CONTINUOUS INDICATES NEW WORK
DRAWING SET APPEARANCE	
TO BETTER COMMUNICATE SCOPE TO PERMIT AGENCIES AND CONTRACTORS, EACH DRAWING IN THIS DRAWING SET HAS BEEN CREATED IN BOTH "COLOR" AND "BLACK AND WHITE". THERE EXISTS A COLOR LAYER WITHIN EACH DRAWING WHERE VISIBILITY IS CONTROLLED THROUGH THE PDF LAYER MANAGER. THIS LAYER VISIBILITY CAN BE TOGGLED DISPLAYING EITHER "COLOR" OR "BLACK AND WHITE". TO MAINTAIN SCOPE BASED SHADING WHEN PRINTING TO PAPER, BLACK AND WHITE NEEDS TO BE VISIBLE. FOR FURTHER INSTRUCTIONS, REFER TO CONTRACTOR RESOURCES ON OUR WEBSITE AND DOWNLOAD "DRAWING COLOR INSTRUCTIONS". WWW.KLHENGRS.COM - CONTRACTOR RESOURCES (RIGHT HAND SIDE OF PAGE).	
PIPING LINE TYPES	
RL	REFRIGERANT LIQUID
RS	REFRIGERANT SUCTION
CD	CONDENSATE DRAIN
	SUPPLY MAIN OR BRANCH
	RETURN MAIN OR BRANCH
MECHANICAL AIR DEVICES	
RR	RETURN REGISTER
ER	EXHAUST REGISTER
CD	CEILING DIFFUSER
CD-10"Ø	2'x2' SQUARE CEILING DIFFUSER WITH 10" NECK
	LINEAR SLOT DIFFUSER
MECHANICAL DUCTWORK	
UP	SUPPLY DUCT WITH ELBOW TURNED UP
DN	SUPPLY DUCT WITH ELBOW TURNED DOWN
UP	RETURN DUCT WITH ELBOW TURNED UP
DN	RETURN DUCT WITH ELBOW TURNED DOWN
UP	EXHAUST DUCT WITH ELBOW TURNED UP
DN	EXHAUST DUCT WITH ELBOW TURNED DOWN
24X12 SA	SUPPLY DUCT
24X12 RA	RETURN DUCT
24X12 EA	EXHAUST DUCT
	FLEXIBLE DUCTWORK CONNECTION
	BRANCH TAKEOFF
	REDUCER, CONCENTRIC
	REDUCER, NONCONCENTRIC
MECHANICAL DUCTWORK ACCESSORIES	
	DUCT WITH MANUAL VOLUME DAMPER
	ROUND ELBOW WITH TURNING VANES
	ELBOW WITH TURNING VANES
M	MOTOR OPERATED DAMPER - LOW VOLTAGE
S	DUCT MOUNTED SMOKE DETECTOR (HARD WIRE INTERLOCK TO FAN MOTOR BY E.C.) FURNISHED BY E.C., INSTALLED BY M.C.
MECHANICAL STATS & SENSORS	
T	LOW VOLTAGE THERMOSTAT
T	LOW VOLTAGE THERMOSTAT WITH LOCKABLE GUARD
L	LINE VOLTAGE THERMOSTAT
CO2	CARBON DIOXIDE SENSOR
MECHANICAL MISCELLANOUS	
UC 0'-1"	1" DOOR UNDERCUT

STANDARD HVAC ABBREVIATIONS

AAV	AUTOMATIC AIR VENT	HD	HEAD	RO	REVERSE OSMOSIS
ACCESS	ACCESSORIES	HOA	HAND/OFF/AUTOMATIC	RPM	REVOLUTIONS PER MINUTE
AD	ACCESS DOOR	HP	HORSEPOWER	RS	REFRIGERANT SUCTION
AFF	ABOVE FINISHED FLOOR	HPR	HIGH PRESSURE RETURN (STEAM CONDENSATE)	SA	SUPPLY AIR
AMP	AMPERE	HSTAT	HUMIDISTAT	SAT	SUPPLY AIR TEMPERATURE
AP	ACCESS PANEL	HTG	HEATING	SC	SHADING COEFFICIENT
APD	AIR PRESSURE DROP	HWR	HEATING HOT WATER RETURN	SCD	SMOKE CONTROL DAMPER
ARI	AIR CONDITIONING AND REFRIGERATION INSTITUTE	HWS	HEATING HOT WATER SUPPLY	SD	SMOKE DETECTOR
ASME	AMERICAN SOCIETY OF MECHANICAL ENGINEERS	HZ	HERTZ	SENS	SENSIBLE HEAT
BAS	BUILDING AUTOMATION SYSTEM	I/O	INPUT/OUTPUT	SP	STATIC PRESSURE
BD	BACKDRAFT DAMPER	IAQ	INDOOR AIR QUALITY	TAB	TESTING, ADJUSTING, BALANCE
BHP	BRAKE HORSEPOWER	IN HG	INCHES OF MERCURY	TDH	TOTAL DYNAMIC HEAD
BTU	BRITISH THERMAL UNIT	IN WC	INCH WATER COLUMN	TDS	TOTAL DISSOLVED SOLIDS
BTUH	BRITISH THERMAL UNIT PER HOUR	IN WG	INCH WATER GAUGE	TSP	TOTAL STATIC PRESSURE
CD	CEILING DIFFUSER	IPLV	INTERGRATED PART LOAD VALUE	TSTAT	THERMOSTAT
CFH	CUBIC FEET PER HOUR	INST	INSTALLED	UL	UNDERWRITERS LABORATORY
CFM	CUBIC FEET PER MINUTE	KW	KILOWATT	VAV	VARIABLE AIR VOLUME
CHWR	CHILLED WATER RETURN	KWH	KILOWATT HOUR	VFD	VARIABLE FREQUENCY DRIVE
CHWS	CHILLED WATER SUPPLY	LAT	LEAVING AIR TEMPERATURE	WB	WET-BULB (TEMPERATURE)
CI	CAST IRON	LBS/HR	POUNDS PER HOUR	WG	WATER GAGE
CLG	COOLING	LF	LINEAR FOOT (FEET)	WPD	WATER SIDE PRESSURE DROP
CO	CARBON MONOXIDE	LPR	LOW PRESSURE RETURN (STEAM CONDENSATE)	WIRE	WIRED
CO2	CARBON DIOXODE	LPS	LOW PRESSURE STEAM		
COP	COEFFICIENT OF PERFORMANCE	LWT	LEAVING WATER TEMPERATURE		
CV	CONSTANT VOLUME	MAX	MAXIMUM		
CWR	CONDENSER WATER RETURN	MBH	1000 BTUH		
CWS	CONDENSER WATER SUPPLY	MCA	MINIMUM BRANCH CIRCUIT AMPACITY		
DB	DECIBELS	MERV	MINIMUM EFFICIENCY REPORTING VALUE		
DB	DRY-BULB TEMPERATURE	MIN	MINIMUM		
DC	DISCONNECT	MOD	MOTOR OPERATED DAMPER		
DDC	DIRECT DIGITAL CONTROLS	MPR	MEDIUM PRESSURE RETURN (STEAM CONDENSATE)		
DEG	DEGREE DELTA(CHANGE IN TEMPERATURE)	MPS	MEDIUM PRESSURE STEAM		
DIA	DIAMETER	MRI	MAGNETIC RESONANCE IMAGING		
DIW	DEIONIZED WATER	MVD	MANUAL VOLUME DAMPER		
DP	DEW POINT TEMPERATURE	NA	NOT APPLICABLE		
DX	DIRECT EXPANSION	NC	NOISE CRITERIA		
EA	EXHAUST AIR	NC	NORMALLY CLOSED		
EAT	ENTERING AIR TEMPERATURE	NO	NORMALLY OPEN		
EER	ENERGY EFFICIENCY RATIO	NTS	NOT TO SCALE		
EG	EXHAUST GRILLE	OA	OUTSIDE AIR		
EMERG	EMERGENCY POWER	OCP	OVER CURRENT PROTECTION		
ESP	EXTERNAL STATIC PRESSURE	PD	PRESSURE DROP		
EWT	ENTERING WATER TEMPERATURE	PPM	PARTS PER MILLION		
EX.	EXISTING	PRS	PRESSURE REGULATING (VALVE) STATION		
F	FAHRENHEIT	PRV	PRESSURE REGULATING VALVE		
F&T	FLOAT AND THERMOSTATIC	PSI	POUNDS PER SQUARE INCH		
FA	FREE AREA	PSIA	POUNDS PER SQUARE INCH – ABSOLUTE		
FD	FIRE DAMPER	PSIG	POUNDS PER SQUARE INCH – GAGE		
FLA	FULL LOAD AMPERES	RA	RETURN AIR		
FPM	FEET PER MINUTE	RAT	RETURN AIR TEMPERATURE		
FPS	FEET PER SECOND	RH	RELATIVE HUMIDITY		
FT	FEET	RL	REFRIGERANT LIQUID LINE		
FURN	FURNISHED	RLA	RUN LOAD AMPERE		
GA	GAUGE				
GAL	GALLONS				
GPM	GALLONS PER MINUTE				

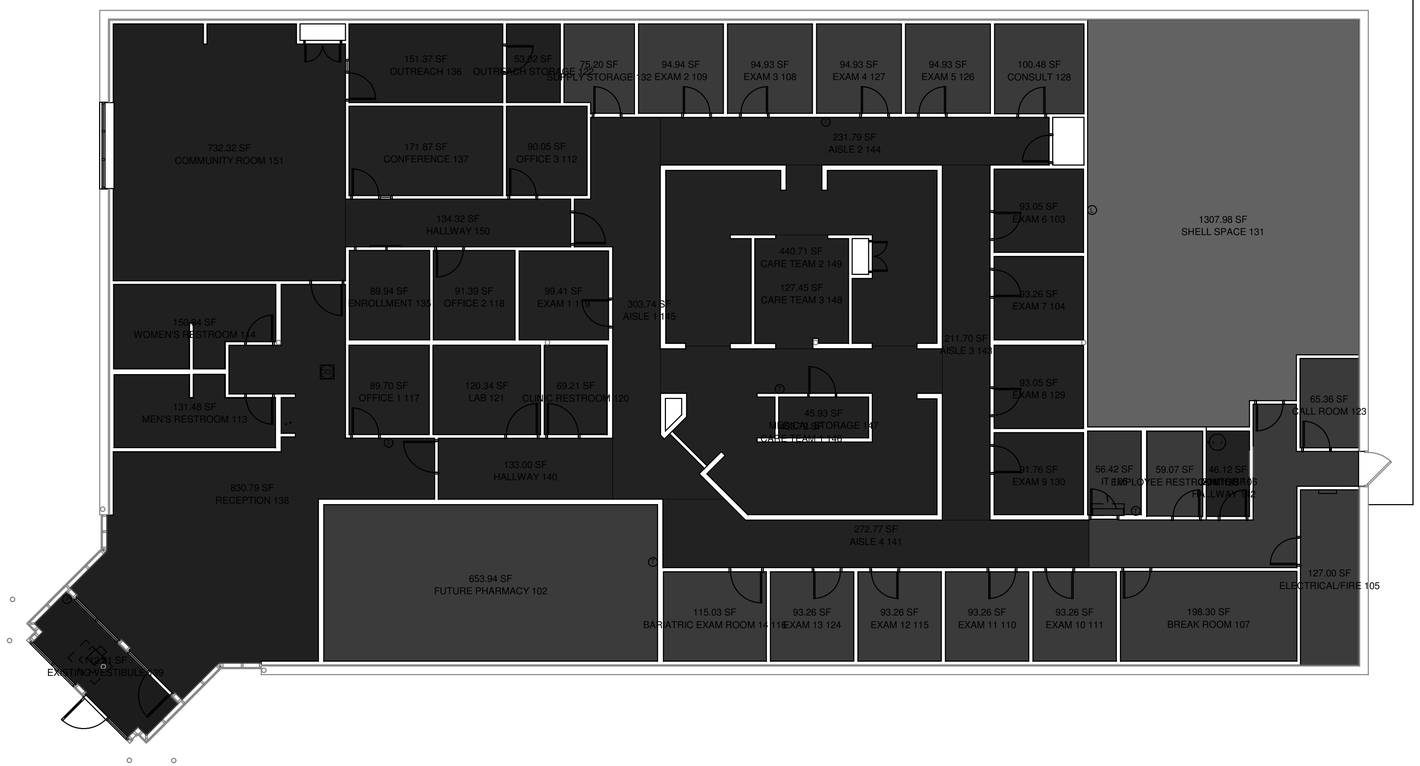

3 MECHANICAL ZONING PLAN
1/8" = 1'-0"

N

MECHANICAL/ELECTRICAL ENGINEERS
WWW.KLHENGRS.COM
KLH ENGINEERS
KOHRS LONNEMANN HEIL ENGINEERS, INC.
1538 ALEXANDRIA PIKE, SUITE 11
FT. THOMAS, KENTUCKY 41075
859-442-8050 859-442-8058
LEXINGTON, KENTUCKY
LOUISVILLE, KENTUCKY
COLUMBUS, OHIO
NEW YORK, NEW YORK
KLH #: 25588

Project

Oak St. Health

520 PENN AVENUE,
WILKINSBURG, PA

Architect

MOODY•NOLAN
300 Spruce Street Phone: (614) 461-4664
Suite 300 Fax: (614) 280-8881
Columbus, Ohio 43215 www.moodynolan.com

Seal:

COMMONWEALTH OF PENNSYLVANIA
REGISTERED PROFESSIONAL
KRIS SCHNITGEN
ENGINEER
PE-087168
9/27/2023

Versions

No.	Date	Description

Sheet Title

MECHANICAL COVER SHEET

Issue Date: 09/05/2023

Drawn: KSL

Project No. 25588

Sheet No.

M-001

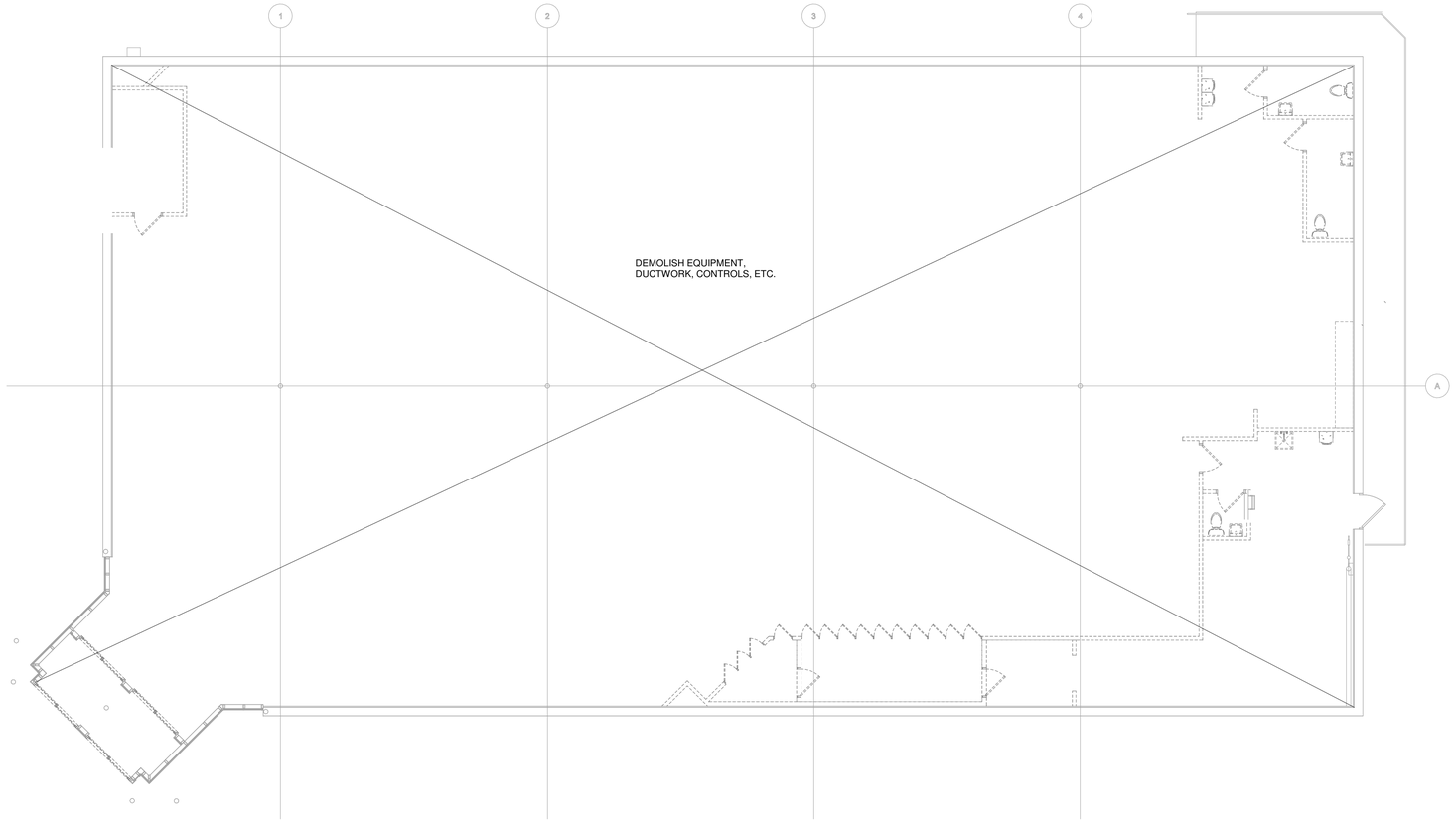

1 MECHANICAL DEMOLITION PLAN - LEVEL 1 - OVERALL
1/8" = 1'-0"

N

KLH ENGINEERS
MECHANICAL/ELECTRICAL ENGINEERS
WWW.KLHENGRS.COM
KOHRS LONNEMANN HEIL ENGINEERS, INC.
1538 ALEXANDRIA PIKE, SUITE 11
FT. THOMAS, KENTUCKY 41075
859-442-8052, 859-442-8050
859-442-8058 FAX
LEXINGTON, KENTUCKY
LOUISVILLE, KENTUCKY
COLUMBUS, OHIO
NEW YORK, NEW YORK
KLH # 25588

Project

Oak St. Health

520 PENN AVENUE,
WILKINSBURG, PA

Architect

MOODY•NOLAN
300 Spruce Street Phone: (614) 461-4664
Suite 300 Fax: (614) 280-8881
Columbus, Ohio 43215 www.moodynolan.com

Seal:

COMMONWEALTH OF PENNSYLVANIA
REGISTERED PROFESSIONAL
KRIS SCHNITGEN
ENGINEER
PE-087168
9/27/2023

Versions

No.	Date	Description

Sheet Title

MECHANICAL DEMOLITION FLOOR PLAN

Issue Date: 09/05/2023

Drawn: KSL

Project No. 25588

Sheet No.

MD-101

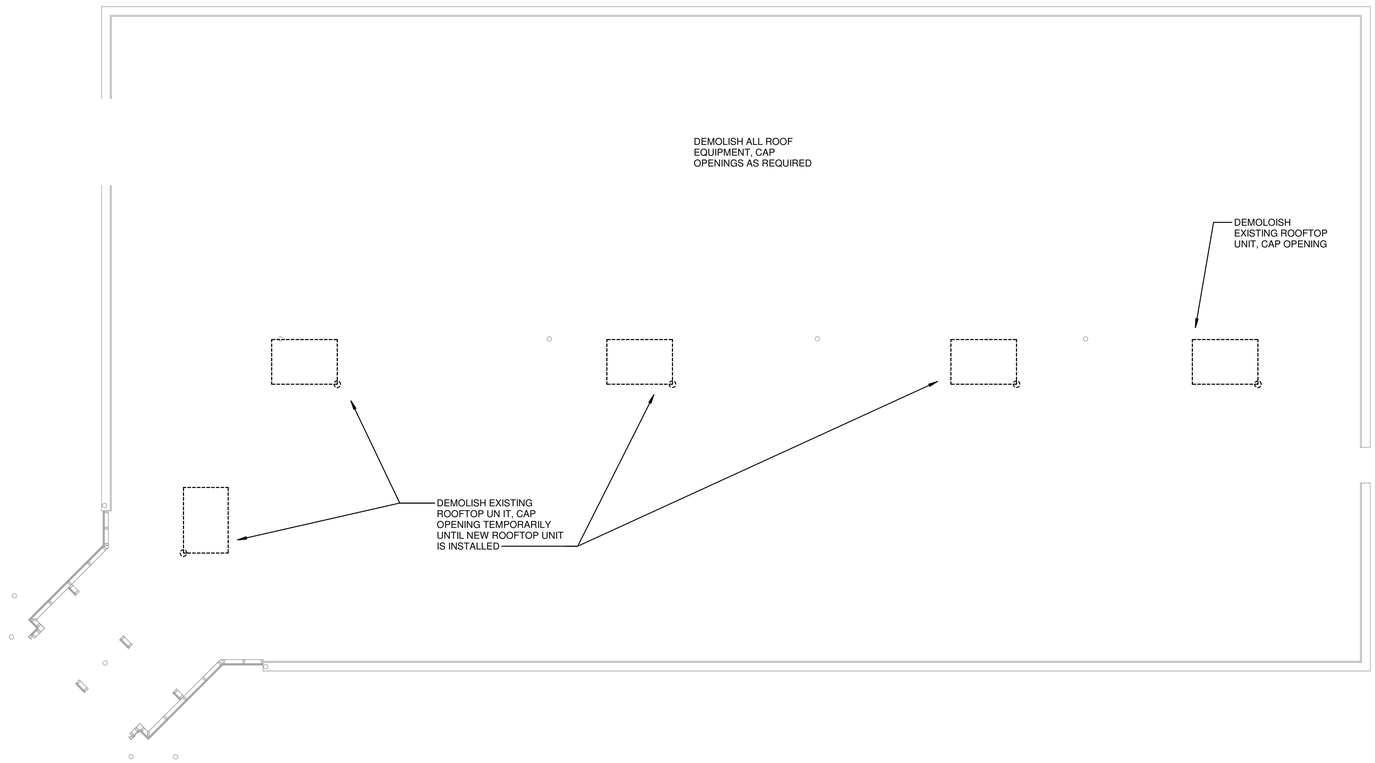

1 MECHANICAL DEMOLITION PLAN - ROOF - OVERALL
1/8" = 1'-0"

N

KLH ENGINEERS
MECHANICAL/ELECTRICAL ENGINEERS
WWW.KLHENGRS.COM
KOHRS LONNEMANN HEIL ENGINEERS, INC.
1538 ALEXANDRIA PIKE, SUITE 11
FT. THOMAS, KENTUCKY 41075
859-442-8050 859-442-8060
859-442-8058 FAX
LEXINGTON, KENTUCKY
LOUISVILLE, KENTUCKY
COLUMBUS, OHIO
NEW YORK, NEW YORK
KLH # 25588

Project

Oak St. Health

520 PENN AVENUE,
WILKINSBURG, PA

Architect

MOODY•NOLAN
300 Spruce Street Phone: (614) 461-4664
Suite 300 Fax: (614) 280-8881
Columbus, Ohio 43215 www.moodynolan.com

Seal:

COMMONWEALTH OF PENNSYLVANIA
REGISTERED PROFESSIONAL
KRIS SCHNITGEN
ENGINEER
PE-087168
9/27/2023

Versions

No.	Date	Description

Sheet Title

MECHANICAL DEMOLITION ROOF PLAN

Issue Date: 09/05/2023

Drawn: KSL

Project No. 25588

Sheet No.

MD-102

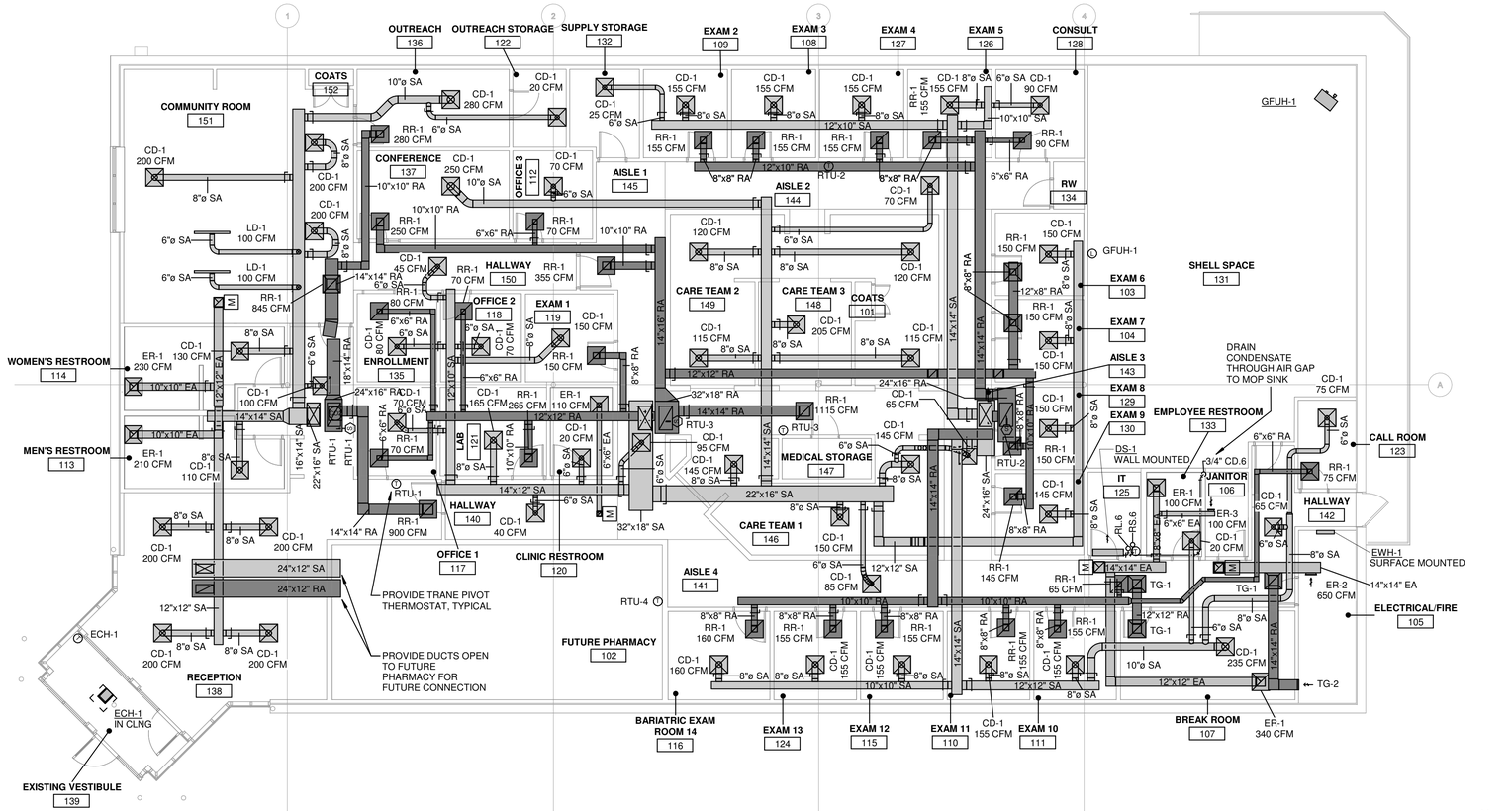

1 MECHANICAL PLAN - LEVEL 1 - OVERALL
1/8" = 1'-0"

KLH ENGINEERS
MECHANICAL/ELECTRICAL ENGINEERS
WWW.KLHENGRS.COM
LEXINGTON, KENTUCKY
LOUISVILLE, KENTUCKY
COLUMBUS, OHIO
NEW YORK, NEW YORK
KLH # 25588
KOHRS LONNEMANN HEIL ENGINEERS, INC.
1538 ALEXANDRIA PIKE, SUITE 11
FT. THOMAS, KENTUCKY 41075
859-442-9292 859-442-9950
859-442-8058 FAX

Project

Oak St. Health

520 PENN AVENUE,
WILKINSBURG, PA

Architect

MOODY•NOLAN
300 Spruce Street Phone: (614) 461-4664
Suite 300 Fax: (614) 280-8881
Columbus, Ohio 43215 www.moodynolan.com

Seal:

COMMONWEALTH OF PENNSYLVANIA
REGISTERED PROFESSIONAL
KRIS SCHNITGEN
ENGINEER
PE-087168
9/27/2023

Versions

No.	Date	Description

Sheet Title

MECHANICAL DUCTWORK LEVEL 1 PLAN

Issue Date: 09/05/2023

Drawn: KSL

Project No. 25588

Sheet No.

M-101

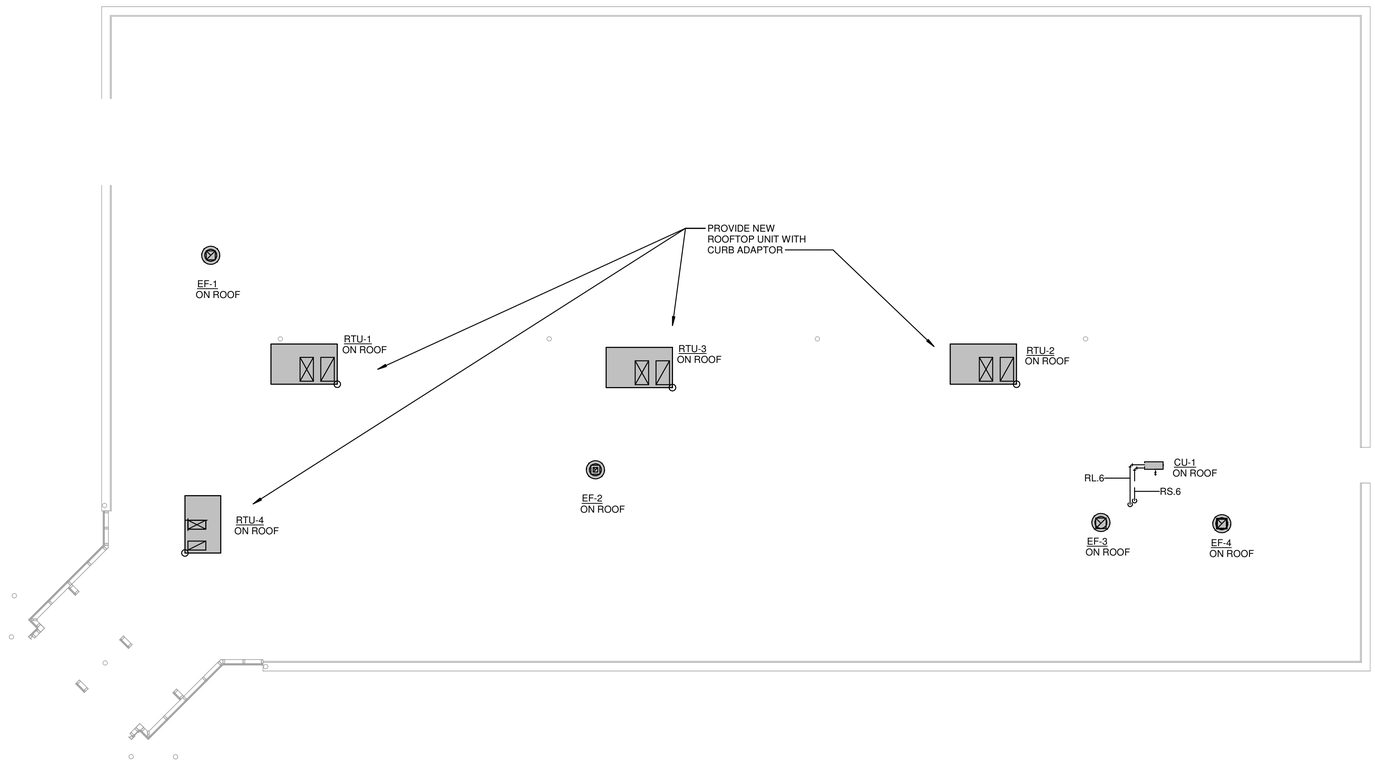

1 MECHANICAL PLAN - ROOF - OVERALL
1/8" = 1'-0"

N

KLH ENGINEERS
MECHANICAL/ELECTRICAL ENGINEERS
WWW.KLHENGRS.COM
KOHRS LONNEMANN HEIL ENGINEERS, INC.
1538 ALEXANDRIA PIKE, SUITE 11
FT. THOMAS, KENTUCKY 41075
859-442-8050 859-442-8060
859-442-8058 FAX
LEXINGTON, KENTUCKY
LOUISVILLE, KENTUCKY
COLUMBUS, OHIO
NEW YORK, NEW YORK
KLH # 25588

Project

Oak St. Health

520 PENN AVENUE,
WILKINSBURG, PA

Architect

MOODY•NOLAN
300 Spruce Street Phone: (614) 461-4664
Suite 300 Fax: (614) 280-8881
Columbus, Ohio 43215 www.moodynolan.com

Seal:

COMMONWEALTH OF PENNSYLVANIA
REGISTERED PROFESSIONAL
KRIS SCHNITGEN
ENGINEER
PE-087168
9/27/2023

Versions

No.	Date	Description

Sheet Title

MECHANICAL DUCTWORK ROOF PLAN

Issue Date: 09/05/2023

Drawn: KSL

Project No. 25588

Sheet No.

M-102

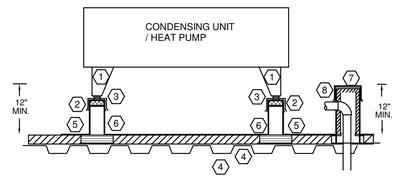

KEYED NOTES:

1. ANCHOR UNIT TO CURB
2. PRESSURE TREATED WOOD NAILER
3. VIBRATION ISOLATORS
4. ROOF DECK
5. PREFABRICATED EQUIPMENT SUPPORT
6. SINGLE MEMBRANE ROOFING, FLASH PER MFG'R RECOMMENDATIONS. FLASH UP AND OVER WOOD NAILER.
7. PREFABRICATED DOG HOUSE
8. SEAL AND FLASH OPENING

GENERAL NOTES:

A. ON PROJECTS WITH BUILT-UP ROOFS, ADD CANT ON EQUIPMENT SUPPORTS AND PREFABRICATE PIPING CHASE
B. PLACE EQUIPMENT ACROSS BAR JOIST OR ADD ADDITIONAL STRUCTURAL STRUCTURAL STEEL AS NECESSARY TO CARRY EQUIPMENT WEIGHT
C. LOCATE A MINIMUM OF 10'-0" FROM EDGE OF ROOF AND ROOF HATCH.

236213.00-02 - EQUIPMENT SUPPORT

SCALE: NONE

KEYED NOTES:

1. GAS FIRED ROOFTOP UNIT LOCATE A MINIMUM OF 10'-0" FROM EDGE OF ROOF AND ROOF HATCH
2. CANVAS FLEXIBLE CONNECTION
3. 1" ACOUSTICALLY LINED DUCTS
4. 4X4 ANGLE FASTENED TO ROOF DECK AND STRUCURAL SYSTEM. PROVIDE SUPPORTS AS REQUIRED
5. FACTORY FABRICATED, INSULATED ROOF CURB (BY SAME MFG'R AS UNIT)
6. FASTEN TO CURB DECK
7. INSULATED RADIUSED ELBOW
8. UNION BY PUMBING CONTRACTOR (PC)
9. GAS SHUT-OFF VALVE BY PC
10. GAS LINE (BLACK STEEL) BY PC
11. SECURE TO CURB
12. WOOD NAILER
13. ROOFING MEMBRANE, FLASH UP TO BELOW WOOD NAILER
14. CANT STRIP
15. ROOF DECK - CUT OPENINGS FOR DUCT PENETRATIONS ONLY
16. CONDENSATE TRAP - SEE CONDENSATE DRAIN TRAP DETAIL
17. HIGH WATER ALARM IN CONDENSATE DRAIN PAN. WIRE TO BREAK 24 VOLT CONTROL POWER IN THE CASE OF A HIGH WATER EVENT.

GENERAL NOTES:

A. CONTRACTOR SHALL PROVIDE CURB TO MAINTAIN 14" MINIMUM ABOVE FINISHED ROOFING SYSTEM. PROVIDE ADDITIONAL BLOCKING AS REQUIRED TO ACCOMMODATE ROOF INSULATION THICKNESS.
B. FINAL LOCATION AND STRUCTURAL VERIFICATION BY OTHERS.

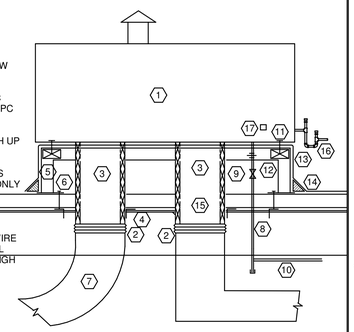

237433.00-04 - ROOF CURB & MOUNTING C

SCALE: NONE

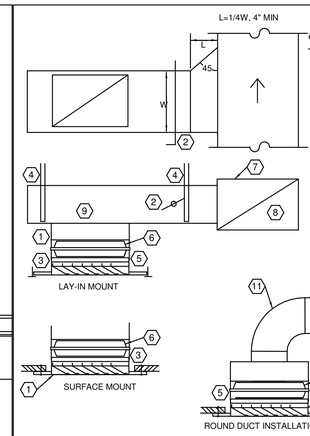

KEYED NOTES:

1. DUCT, COLLAR AND RETURN/EXHAUST REGISTER
2. MANUAL VOLUME DAMPER
3. SECURE TO CEILING PER MANUFACTURER'S RECOMMENDATIONS AND PER CEILING FINISH. PROVIDE GRID CLIPS PER MFG'R REQUIREMENTS
4. HANGER, SECURE TO STRUCTURE AND DUCTWORK
5. ATTACH DUCT TO REGISTER
6. BALANCING DAMPER FOR FINAL BALANCING
7. SHEET METAL DUCTWORK
8. MAIN RETURN/EXHAUST DUCT
9. TAP DROP TO RETURN/EXHAUST REGISTER INTO BOTTOM OF BRANCH
10. SPIN IN FITTING
11. HARD SHEET METAL ELBOW AT CONNECTION TO AIR DEVICE

233713.00-21 - RETURN/EXHAUST REGISTER INSTALLATION

SCALE: NONE

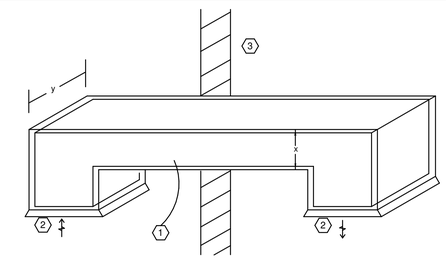

GENERAL NOTES:

A. SEE NEW WORK PLAN FOR DUCT SIZE
B. x + y DIMENSIONS SHALL BE DETERMINED FROM FLOOR PLANS

KEYED NOTES:

1. 1/2" ACOUSTIC LINING, SEAL AROUND ALL WALL PENETRATIONS
2. SEE NEW WORK PLAN FOR REGISTER
3. INTERIOR WALL/PARTITION

233713.00-19 - TRANSFER GRILLE

SCALE: NONE

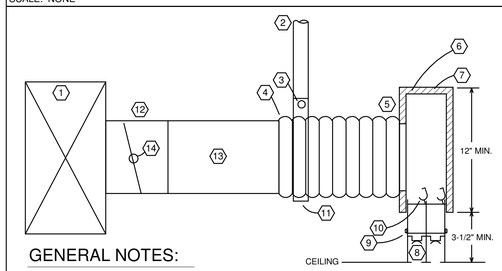

GENERAL NOTES:

A. WHERE LINEAR DIFFUSER IS ADJACENT TO WINDOWS, ADJUST PATTERN CONTROLLER TO DIRECT AIRFLOW HORIZONTALLY TOWARDS WINDOWS.

KEYED NOTES:

1. LOW PRESSURE SUPPLY DUCT
2. 1" WIDE BAND AND CLAMP
3. SHEET METAL SCREW
4. INSULATED FLEX. DUCT MAX LENGTH 5'-0" ABOVE ACCESSIBLE CEILINGS ONLY.
5. PEEL BACK INSULATION AND PROVIDE STRAPPING AND SHEET METAL SCREWS AT FLEX CONNECTION TO DUCT. THEN PROVIDE STRAPPING AROUND INSULATION
6. SHEET METAL PLENUM
7. 1/2" ACOUSTICAL LINING
8. PATTERN CONTROLLER
9. SCREWS, MIN 6" ON CENTER & SEAL AIRTIGHT, TYP, BOTH SIDES
10. VOLUME ADJUSTER
11. BAND CLAMP MAXIMUM SAG 1/2" PER FOOT BETWEEN SUPPORT BRACING
12. TAKE-OFF SPIN-IN FITTING WITH ADJUSTABLE MANUAL DAMPER. LOCATE ABOVE ACCESSIBLE CEILING OR PROVIDE ACCESS PANEL BELOW DAMPER.
13. SHEET METAL BRANCH DUCT
14. MANUAL VOLUME DAMPER

233713.00-14 - PLENUM-LINEAR DIFFUSER

SCALE: NONE

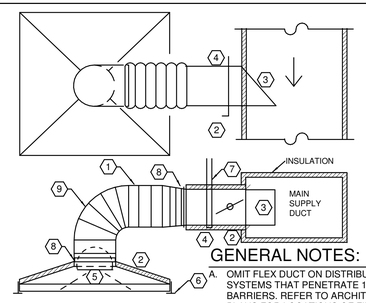

KEYED NOTES:

1. MAXIMUM LENGTH OF INSUL. FLEX DUCT EQUALS 5 FEET. FLEX NOT PERMITTED IN INACCESSIBLE CEILINGS
2. INSULATED DUCT, COLLAR AND DIFFUSER BY HVAC CONTRACTOR
3. SCOOP
4. SPIN IN FITTING WITH MANUAL VOLUME DAMPER
5. INTERNAL BUTTERFLY DAMPER FOR DRYWALL APPLICATIONS ONLY. (PROVIDE KEY FOR ADJUSTMENT)
6. SECURE TO CEILING PER MANUFACTURER'S RECOMMENDATIONS AND PER CEILING FINISH. PROVIDE GRID CLIPS PER MFG'R REQUIREMENTS. PROVIDE FRAMING FOR DRYWALL INSTALLATION.
7. HANGER, SECURE TO STRUCTURE AND DUCTWORK
8. PEEL BACK INSULATION AND PROVIDE STRAPPING AND SHEET METAL SCREWS AT FLEX CONNECTION TO DUCT. THEN PROVIDE STRAPPING AROUND INSULATION.
9. SUPPORT FLEX TO PREVENT COLLAPSING

GENERAL NOTES:

A. OMIT FLEX DUCT ON DISTRIBUTION SYSTEMS THAT PENETRATE 1-HR FIRE BARRIERS. REFER TO ARCHITECTURAL PLANS FOR LOCATIONS OF FIRE BARRIERS.

233713.00-04 - DIFFUSER INSTALLATION TYPICAL

SCALE: NONE

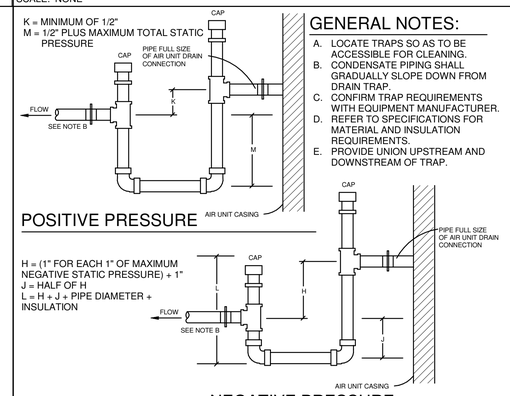

GENERAL NOTES:

A. LOCATE TRAPS SO AS TO BE ACCESSIBLE FOR CLEANING.
B. CONDENSATE PIPING SHALL GRADUALLY SLOPE DOWN FROM DRAIN TRAP.
C. CONFIRM TRAP REQUIREMENTS WITH EQUIPMENT MANUFACTURER.
D. REFER TO SPECIFICATIONS FOR MATERIAL AND INSULATION REQUIREMENTS.
E. PROVIDE UNION UPSTREAM AND DOWNSTREAM OF TRAP.

NOTE: OUTDOOR UNITS AND UNITS LOCATED IN UNCONDITIONED SPACES WHICH PROVIDE COOLING IN THE WINTER MUST HAVE HEAT TRACE ON THE CONDENSATE PIPING.

232113.23-05 - CONDENSATE DRAIN TRAP POSITIVE & NEGATIVE

SCALE: NONE

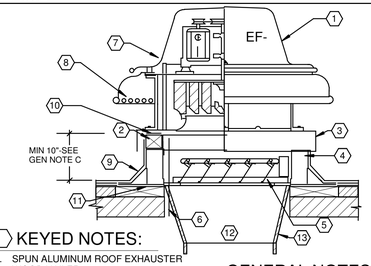

KEYED NOTES:

1. SPUN ALUMINUM ROOF EXHAUSTER
2. WOOD NAILER
3. ANCHOR ALL FOUR SIDES OF CURB CAP INTO NAILER SCREWS AT 12" O.C.
4. PREFABRICATED, INSULATED ALUMINUM CURB
5. MOTOR OPERATED DAMPER WIRED TO INTERFACE WITH EXHAUST FAN START/STOP
6. CONDUIT THROUGH HOLE IN DAMPER SHELF
7. POWER DISCONNECT
8. ALUMINUM BIRD SCREEN
9. CURB TYPE AND FLASHING PER ROOFING MANUFACTURER'S REQUIREMENTS
10. RUBBER GASKET APPLIED TO TOP OF CURB
11. ANCHOR TO ROOF DECK AS REQUIRED
12. CENTER TRANSITION TO DUCTWORK FROM DAMPER OR CURB. PROVIDE 3x DIAMETER STRAIGHT RUN MINIMUM.
13. INSULATED DUCTWORK

GENERAL NOTES:

A. DELETE CANT FOR SINGLE MEMBRANE ROOFS.
B. TOP OF CURB MUST BE LEVEL. FABRICATE PITCH IN CURB OR SHIM AS NECESSARY.
C. TOP OF CURB SHALL BE A MINIMUM OF 10" ABOVE FINISHED ROOF SURFACE. CONTRACTOR HAS THE OPTION TO EITHER FURNISH A CURB WITH SUFFICIENT HEIGHT TO ACCOMMODATE ROOF INSULATION THICKNESS OR TO ADD PRESSURE TREATED WOOD BLOCKING, SECURED TO THE ROOF DECK, BELOW THE CURB
D. LOCATE FAN A MINIMUM OF 10'-0" FROM EDGE OF ROOF, INTAKES, AND ROOF HATCH.
E. INSTALL ROOF MEMBRANE UP UNDER FLASHING, FLASH PER ROOFING MFGR. RQMTS.

230423.00-10 - ROOF EXHAUSTER A

SCALE: NONE

GENERAL NOTES:

1. PROVIDE SPLITTER DAMPER (SD) AT ALL MAIN BRANCH TAKEOFFS
2. PROVIDE MANUAL VOLUME DAMOERS AT ALL BRANCH TAKEOFFS
3. PROVIDE MINIMUM 3 TIMES STRAIGHT INLET DIAMETER TO ALL VAV TERMINAL DEVICES
4. DAMPER NOT REQUIRED AT TERMINAL DEVICE TAKEOFF
5. ALL MANUAL DAMPERS SHALL BE LOCATED IN AN ACCESSIBLE CEILING. PROVIDE ACCESS PANEL AS REQUIRED.

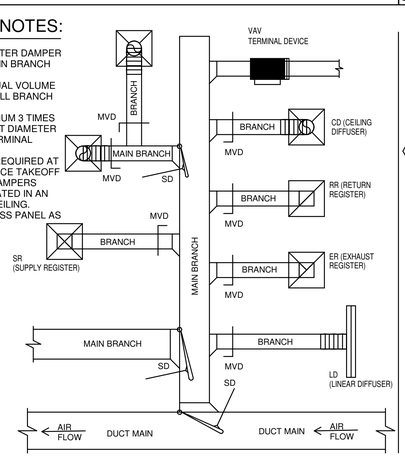

233300.00-01 - MANUAL DAMPER DETAIL

SCALE: NONE

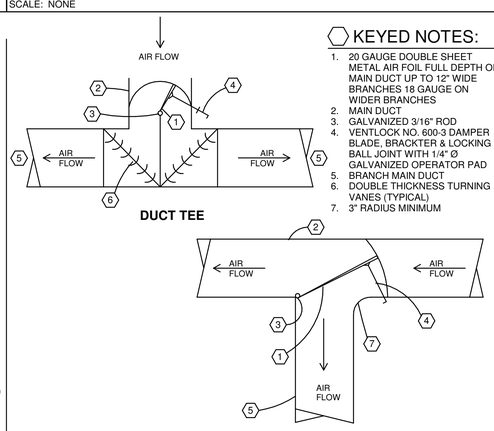

KEYED NOTES:

1. 20 GAUGE DOUBLE SHEET METAL AIR FOIL FULL DEPTH OF MAIN DUCT UP TO 12" WIDE BRANCHES 18 GAUGE ON WIDER BRANCHES
2. MAIN DUCT
3. GALVANIZED 3/16" ROD
4. VENTLOCK NO. 600-3 DAMPER BLADE, BRACKTER & LOCKING BALL JOINT WITH 1/4" Ø GALVANIZED OPERATOR PAD
5. BRANCH MAIN DUCT
6. DOUBLE THICKNESS TURNING VANES (TYPICAL)
7. 3" RADIUS MINIMUM

233113.00-02 - DUCT SUPPORT DETAIL

SCALE: NONE

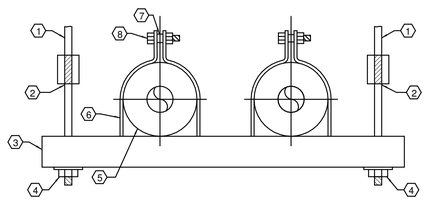

KEYED NOTES:

1. CONNECT TO STRUCTURE (TYPICAL).
2. GALVANIZED THREADED HANGER RODS (TYPICAL). SEE SPECIFICATIONS.
3. UNISTRUT.
4. PLATED NUT & WASHER (TYPICAL).
5. CONTINUOUS INSULATION AS SPECIFIED, (TYPICAL).
6. CHANNEL MOUNTED CLAMPING SYSTEM (TYPICAL).
7. SPACER SIZED TO PREVENT COMPRESSION OF INSULATION.
8. PLATED DOUBLE NUT AND WASHER.

230529.00-02 - REFRIGERANT PIPING SUPPORT

SCALE: NONE

MECHANICAL/ELECTRICAL ENGINEERS
WWW.KLHENGRS.COM
LEXINGTON, KENTUCKY
LOUISVILLE, KENTUCKY
COLUMBUS, OHIO
NEW YORK, NEW YORK
KLH #: 25588

KLH ENGINEERS
KOHRS LONNEMANN HEIL ENGINEERS, INC.
1538 ALEXANDRIA PIKE, SUITE 11
FT. THOMAS, KENTUCKY 41075
859-442-8050 859-442-8060
859-442-8058 FAX

Project

Oak St. Health
520 PENN AVENUE,
WILKINSBURG, PA

Architect

MOODY•NOLAN
300 Spruce Street Phone: (614) 461-4664
Suite 300 Fax: (614) 280-8881
Columbus, Ohio 43215 www.moodynolan.com

Seal:

COMMONWEALTH OF PENNSYLVANIA
REGISTERED PROFESSIONAL
KRIS SCHNITGEN
ENGINEER
PE-087168
9/27/2023

Versions

No.	Date	Description

Sheet Title

MECHANICAL - DETAILS

Issue Date: 09/05/2023

Drawn: KSL
Project No. 25588

Sheet No.

M-501

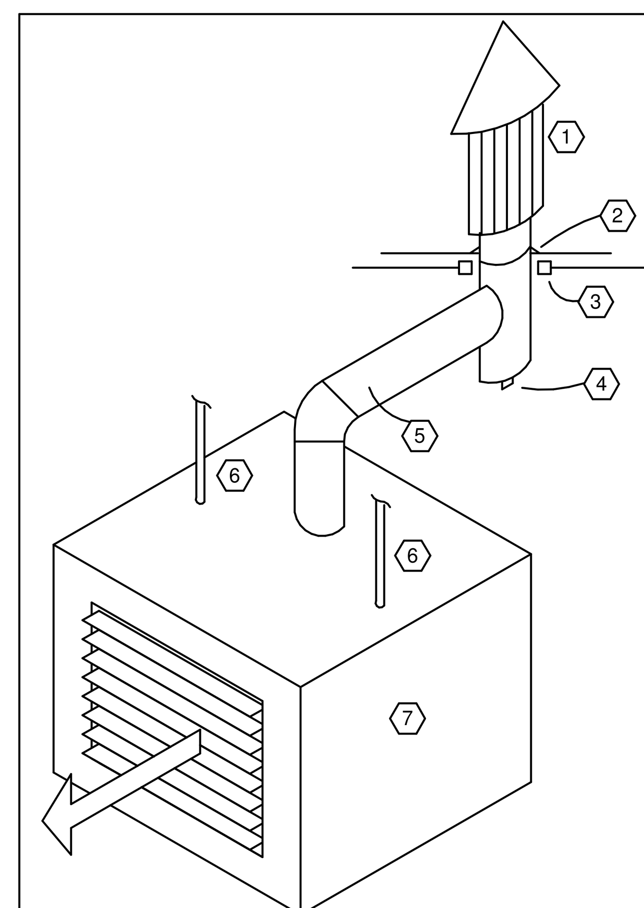

KEYED NOTES:

1. VENT CAP
2. CURB AND FLASHING
3. ROOF THIMBLE
4. CLEAN OUT
5. DOUBLE WALL VENT PIPE
6. GALVANIZED HANGER RODS DOUBLE NUT
7. UNIT HEATER

235533.00-01 - GAS FIRED UNIT HEATER TO VENT CAP

SCALE: NONE

KLH ENGINEERS
KOHRS LONNEMANN HEIL ENGINEERS, INC.
1538 ALEXANDRIA PIKE, SUITE 11
FT. THOMAS, KENTUCKY 41075
800-354-9783 859-442-8050
859-442-8058 FAX

MECHANICAL/ELECTRICAL ENGINEERS

WWW.KLHENGRS.COM

LEXINGTON, KENTUCKY
LOUISVILLE, KENTUCKY
COLUMBUS, OHIO
NEW YORK, NEW YORK
KLH #: 25588

Project

Oak St. Health

520 PENN AVENUE,
WILKINSBURG, PA

Architect

MOODY•NOLAN
300 Spruce Street
Suite 300
Columbus, Ohio 43215
Phone: (614) 461-4664
Fax: (614) 280-8881
www.moodynolan.com

Seal:

COMMONWEALTH OF PENNSYLVANIA
REGISTERED PROFESSIONAL
KRIS SCHNITGEN
ENGINEER
PE-087168

9/27/2023

Versions

No.	Date	Description

Sheet Title

MECHANICAL - DETAILS

Issue Date: 09/05/2023

Drawn KSL

Project No. 25588

Sheet No.

M-502

HVAC ROOFTOP UNITS SCHEDULE

Equipment shall be braced and labeled by the equipment manufacturer to withstand the minimum scheduled available fault current value for listed equipment.

EQUIPMENT MARK	DESCRIPTION	LOCATION	STATUS	WEIGHT (lbs)	MANUFACTURER	MODEL	MIN EER	MIN SEER	CFM (cfm)	ESP (in WC)	OACFM (cfm)	CO2 CFM (cfm)	NOMINAL TONS	MAT CLG DB (Deg F)	MAT CLG WB (Deg F)	CLG MBH (mbh)	CLG SENS (mbh)	LAT DB (Deg F)	LAT CLG WB (Deg F)	MAT HTG (Deg F)	HTG MBH (mbh)	MIN HTG AFUE	GAS HTG IN (mbh)	GAS HTG OUT (mbh)	MIN GAS PRESSURE (in WC)	MAX GAS PRESSURE (in WC)	EMERGENCY	ELECTRIC CONNECTION SUMMARY	AVAILABLE FAULT CURRENT	ACCESSORIES
RTU-1	PACKAGED ROOFTOP UNIT, GAS HEAT		NEW	1211	TRANE	YSJ072	11.0		2285	1	475	103	6	79	66	75	54	55	54	58	62	80	200	162	4.5	14	NO	RTU-1 - 240V/3PH, 42 MCA, 50A OCP	1980	2,3,4,20,21 - ADD ACCESSORIES IN FIELD AS REQUIRED
RTU-2	PACKAGED ROOFTOP UNIT, GAS HEAT		NEW	900	TRANE	YSC060	0.0	12.0	1910	1	413	0	5	79	66	60	46	55	54	57	46	80	81	64.8	4.5	14	NO	RTU-2 - 240V/3PH, 30 MCA, 45A OCP	3678	2,3,4,21 - ADD ACCESSORIES IN FIELD AS REQUIRED
RTU-3	PACKAGED ROOFTOP UNIT, GAS HEAT		NEW	1211	TRANE	YSJ090	11.0		2980	1	665	0	7.5	79	65	94	69	55	54	58	62	80	200	162	4.5	14	NO	RTU-3 - 240V/3PH, 42 MCA, 50A OCP	2572	2,3,4,21 - ADD ACCESSORIES IN FIELD AS REQUIRED
RTU-4	PACKAGED ROOFTOP UNIT, GAS HEAT		NEW	850	TRANE	YSC036	0.0	12.0	1100	0.25	191	0	3	78	65	31	26	55	54	60	20	80	81	64.8	4.5	14	NO	RTU-4 - 240V/3PH, 20 MCA, 30A OCP	922	3,4,23

HVAC VRF (OUTDOOR UNITS) SCHEDULE

Equipment shall be braced and labeled by the equipment manufacturer to withstand the minimum scheduled available fault current value for listed equipment.

EQUIPMENT MARK	DESCRIPTION	LOCATION	STATUS	WEIGHT (lbs)	MANUFACTURER	MODEL	MAT CLG DB (Deg F)	MAT CLG WB (Deg F)	CLG MBH (mbh)	CLG SENS (mbh)	NOMINAL TONS	EMERGENCY	ELECTRIC CONNECTION SUMMARY	AVAILABLE FAULT CURRENT
CU-1	VRF OUTDOOR, AIR COOLED UNIT		NEW	99	MITSUBISHI	PUY-A18NKA7	76	64	13	13	1.5	NO	CU-1 - 240V/1PH, 11 MCA, 30A OCP	3520

HVAC DUCTLESS SPLIT SYSTEMS (INDOOR UNITS) SCHEDULE

Equipment shall be braced and labeled by the equipment manufacturer to withstand the minimum scheduled available fault current value for listed equipment.

EQUIPMENT MARK	DESCRIPTION	LOCATION	STATUS	FED FROM	WEIGHT (lbs)	MANUFACTURER	MODEL	NOMINAL TONS	MAT CLG DB (Deg F)	MAT CLG WB (Deg F)	CLG MBH (mbh)	CLG SENS (mbh)	LAT CLG DB (Deg F)	LAT CLG WB (Deg F)	LAT HTG (Deg F)	EMERGENCY	ELECTRIC CONNECTION SUMMARY	AVAILABLE FAULT CURRENT
DS-1	DUCTLESS SPLIT INDOOR UNIT	IT 125	NEW	CU-1	28	MITSUBISHI	PKA-A18LA	1.5	35	35	18	0	35	35	35		DS-1 - 240V/1PH, 1.5A FLA	5227

HVAC UNIT HEATERS SCHEDULE

Equipment shall be braced and labeled by the equipment manufacturer to withstand the minimum scheduled available fault current value for listed equipment.

EQUIPMENT MARK	DESCRIPTION	LOCATION	STATUS	WEIGHT (lbs)	MANUFACTURER	MODEL	HTG MBH (mbh)	HW EWT (Deg F)	HW LWT (Deg F)	HTG GPM (gpm)	MIN HTG AFUE	GAS HTG IN (mbh)	GAS HTG OUT (mbh)	MIN GAS PRESSURE (in WC)	MAX GAS PRESSURE (in WC)	EMERGENCY	ELECTRIC CONNECTION SUMMARY	AVAILABLE FAULT CURRENT
ECH-1	ELECTRIC CEILNG HEATER	EXISTING VESTIBULE 139	NEW	6	MARKEL	E3035DWBW	3					0				NO	ECH-1 - 120V/1PH, 1.5 KW HTG, 13A FLA	1125
EWH-1	ELECTRIC UNIT HEATER	ELECTRICAL/FIRE 105	NEW	25	MARKEL	E3055	5					0				NO	EWH-1 - 120V/1PH, 1.5 KW HTG, 12.5 MCA	2557

HVAC GAS-FIRED HEATERS SCHEDULE

Equipment shall be braced and labeled by the equipment manufacturer to withstand the minimum scheduled available fault current value for listed equipment.

EQUIPMENT MARK	DESCRIPTION	LOCATION	STATUS	EQUIP SERVED BY	WEIGHT (lbs.)	MANUFACTURER	MODEL	HTG MBH (mbh)	MIN HTG AFUE	GAS HTG IN (mbh)	GAS HTG OUT (mbh)	MIN GAS PRESSURE (in WC)	MAX GAS PRESSURE (in WC)	EMERGENCY	ELECTRIC CONNECTION SUMMARY	AVAILABLE FAULT CURRENT
GFUH-1	GAS FIRED UNIT HEATER	SHELL SPACE 131	NEW		71	REZNOR	UDX060	25	83	60	49	4.5	14	NO	GFUH-1 - 120V/1PH, 2.4A FLA	917

OSH HVAC DIFFUSERS AND REGISTERS SCHEDULE

TAG	MANUFACTURER	MODEL	FACE	MOUNTING	MATERIAL	FINISH	DAMPER TYPE	BORDER STYLE	REMARKS
CD-1	TITUS	TMS	24"x24"	CEILING	ALUMINUM	STANDARD WHITE	OPPOSED BLADE	LAY IN MOUNTING	
ER-1	TITUS	350RL	24"x24"	CEILING	ALUMINUM	STANDARD WHITE	OPPOSED BLADE	LAY IN MOUNTING	
ER-2	TITUS	350RL	14"x10"	SIDEWALL	ALUMINUM	STANDARD WHITE	OPPOSED BLADE	SURFACE MOUNT	
ER-3	TITUS	350RL	8"x4"	SIDEWALL	ALUMINUM	STANDARD WHITE	OPPOSED BLADE	SURFACE MOUNT	
LD-1	TITUS	TBDI-10	4'-0"-(1) 1" SLOT	CEILING	ALUMINUM	STANDARD WHITE	OPPOSED BLADE	SURFACE MOUNT	PROVIDE WITH INSULATED PLENUM BOX
RR-1	TITUS	350RL	24"x24"	CEILING	ALUMINUM	STANDARD WHITE	OPPOSED BLADE	LAY IN MOUNTING	
TG-1	TITUS	350RL	24"x24"	CEILING	ALUMINUM	STANDARD WHITE	(none)	LAY IN MOUNTING	
TG-2	TITUS	350RL	14"x14"	SIDEWALL	ALUMINUM	STANDARD WHITE	(none)	SURFACE MOUNT	

HVAC ACCESSORIES

ACCESSORIES:

1. MOTOR DAMPER
2. ECONOMIZER
3. ROOF CURB
4. HAIL GUARDS
5. INTAKE HOOD
6. VIBRATION ISOLATION
7. FLAT FILTER
8. FILTER/MIXING BOX
9. ACCESS DOOR
10. FLEX CONNECTIONS
11. MOUNTING COLLAR
12. HOT GAS BYPASS
13. FACE/BYPASS DAMPER
14. CONDENSATE PUMP
15. MOTOR GUARD
16. GREASE TRAP
17. DUCT FLANGES
18. BASE RAIL
19. HUMIDIFIER
20. CO2 SENSORS
21. ECON POWERED EXHAUST
22. ECON BAROMETRIC RELIEF
23. HOT GAS REHEAT COIL
24. SHAFT GROUNDING BRUSHES

KLH ENGINEERS
KOHRS LONNEMANN HEIL ENGINEERS, INC.
1538 ALEXANDRIA PIKE, SUITE 11
FT. THOMAS, KENTUCKY 41075
800-354-9783 859-442-8050
859-442-8058 FAX

MECHANICAL/ELECTRICAL ENGINEERS
WWW.KLHENGRS.COM
LEXINGTON, KENTUCKY
LOUISVILLE, KENTUCKY
COLUMBUS, OHIO
NEW YORK, NEW YORK
KLH #: 25588

Project
Oak St. Health
520 PENN AVENUE,
WILKINSBURG, PA

Architect
MOODY•NOLAN
300 Spruce Street
Suite 300
Columbus, Ohio 43215
Phone: (614) 461-4664
Fax: (614) 280-8881
www.moodynolan.com

Seal:
COMMONWEALTH OF PENNSYLVANIA
REGISTERED PROFESSIONAL ENGINEER
KRIS SCHNITGEN
PE-087168
9/27/2023

Versions

No.	Date	Description

Sheet Title
MECHANICAL - SCHEDULES

Issue Date: 09/05/2023

Drawn KSL

Project No. 25588

Sheet No.
M-601

HVAC ELECTRICAL COORDINATION SCHEDULE

ABBREVIATIONS	
DC	LOCAL DISCONNECT
MC	MOTOR CONTROL (POWER)
SD	DUCT SMOKE DETECTOR
CN	CONTROLS
TS	TOGGLE SWITCH
C/B	H.A.C.R. CIRCUIT BREAKER AT SOURCE PANELBOARD
FUSE	FUSE AT LOCAL DISCONNECT (VERIFY FIELD RATING)
FLA	OPERATING FULL LOAD AMPS
MCA	MINIMUM CIRCUIT AMPACITY
CP	CORD AND PLUG CONNECTION
[BLANK]	HARD WIRED (WHEN INDICATED FOR DC TYPE)

CONTRACTOR TYPE	
EC	ELECTRICAL CONTRACTOR
EX	EXISTING
FC	FIRE PROTECTION CONTRACTOR
GC	GENERAL CONTRACTOR
HC	HVAC CONTRACTOR
MFR	MANUFACTURER
PC	PLUMBING CONTRACTOR
OR	OWNER OR OTHERS

MOTOR CONTROL TYPE	
CS	COMBINATION STARTER
MCC	MOTOR CONTROL STARTER
MG	MAGNETIC STARTER OR CONTACT
MS	MANUAL STARTER
VFD	VARIABLE FREQUENCY DRIVE
MSR	MANUAL STARTER W/ CONTROL RELAY
OV	OVERCURRENT PROTECTION

CONTROL TYPE	
TC	TIMECLOCK
CPT	CONTROL POWER TRANSFORMER
BAS	BUILDING AUTOMATION SYSTEM
LOW	LOW VOLTAGE CONTROLS
LINE	LINE VOLTAGE CONTROLS
RLINE	REVERSE ACTING LINE VOLTAGE THERMOSTAT
MAN	MANUAL
FA	FIRE ALARM
CO	CARBON MONOXIDE SENSOR
INT	INTEGRAL TO EQUIPMENT
ASD	AREA SMOKE DETECTOR
DSD	DUCT SMOKE DETECTOR

CONTROL TYPE
WHERE SHORT CIRCUIT RATING CODE REQUIRED VALUE INDICATES "YES" APPLICABLE EQUIPMENT'S SHORT CIRCUIT RATING SHALL EXCEED THE AVAILABLE FAULT CURRENT VALUE INDICATED.

CONNECTION MARK	DESCRIPTION	VOLTAGE	PHASE	EMERGENCY	HP	WATTS	HTG KW	FLA	MCA	OCP	FED FROM	DC TYPE	DC FURN	DC INST	DC WIRE	MC TYPE	MC FURN	MC INST	MC WIRE	CN TYPE	CN FURN	CN INST	CN WIRE	SHORT CIRCUIT RATING CODE REQUIRED?	AVAILABLE FAULT CURRENT
CU-1	VRF OUTDOOR, AIR COOLED UNIT	240 V	1						11	30			EC	EC	EC	MG	MFR	MFR	MFR	LOW	HC	HC	HC	Yes	3520
ECH-1	ELECTRIC CEILNG HEATER	120 V	1				1.5	13					EC	EC	EC	MG	MFR	MFR	MFR	LOW	HC	HC	EC	No	1125
EF-1	HVAC FAN	120 V	1		0.25					15			EC	EC	EC	MG	MFR	MFR	MFR	LINE	EC	EC	EC	No	769
EF-2	HVAC FAN	120 V	1		0.25					15			EC	EC	EC	MG	MFR	MFR	MFR	LINE	EC	EC	EC	No	1142
EF-3	HVAC FAN	120 V	1		0.25					15			EC	EC	EC	MG	MFR	MFR	MFR	LINE	EC	EC	EC	No	1779
EF-4	HVAC FAN	120 V	1		0.167			2.8	3.5	15			EC	EC	EC	MG	MFR	MFR	MFR	LINE	EC	EC	EC	No	2595
EWH-1	ELECTRIC UNIT HEATER	120 V	1				1.5		12.5				EC	EC	EC	MG	MFR	MFR	MFR	INT	MFR	MFR	MFR	No	2557
GFUH-1	GAS FIRED UNIT HEATER	120 V	1					2.4					EC	EC	EC	MG	MFR	MFR	MFR	LOW	HC	HC	EC	No	917
RTU-1	PACKAGED ROOFTOP UNIT, GAS HEAT	240 V	3						42	50			EC	EC	EC	MG	MFR	MFR	MFR	LOW	HC	HC	HC	Yes	1980
RTU-2	PACKAGED ROOFTOP UNIT, GAS HEAT	240 V	3						30	45			EC	EC	EC	MG	MFR	MFR	MFR	LOW	HC	HC	HC	Yes	3678
RTU-3	PACKAGED ROOFTOP UNIT, GAS HEAT	240 V	3						42	50			EC	EC	EC	MG	MFR	MFR	MFR	LOW	HC	HC	HC	Yes	2572
RTU-4	PACKAGED ROOFTOP UNIT, GAS HEAT	240 V	3						20	30			EC	EC	EC	MG	MFR	MFR	MFR	LOW	HC	HC	HC	Yes	922

HVAC LOAD SCHEDULE

THE HEATING AND COOLING LOAD CALCULATIONS ARE BASED ON THE RTS (RADIANT TIME SERIES) METHOD. ASSUMPTIONS AND EXECUTION OF THESE METHODS ARE PER ASHRAE 183-2007 STANDARD FOR PEAK COOLING AND HEATING LOAD CALCULATIONS IN BUILDINGS EXCEPT LOW-RISE RESIDENTIAL BUILDINGS.

COOLING LOAD BREAKDOWN

CROOF	SENSIBLE HEAT GAIN FROM ROOF
CWALL	SENSIBLE HEAT GAIN FROM EXTERIOR WALLS
CPART	SENSIBLE HEAT GAIN FROM PARITIONS
CGLASS	SENSIBLE HEAT GAIN FROM GLAZING
CSOLAR	SENSIBLE HEAT GAIN FROM SOLAR GAIN THROGH GLAZING
CLIGHTS	SENSIBLE HEAT GAIN FROM INTERIOR LIGHTING
CEQUIP	SENSIBLE HEAT GAIN FROM PLUG LOADS, COMPUTERS, ETC.
CPSENS	SENSIBLE HEAT GAIN FROM PEOPLE
CSSENS	TOTAL SENSIBLE HEAT GAIN TO SPACE
CFAN	SENSIBLE HEAT GAIN FROM AIR HANDLER FAN
COAS	SENSIBLE HEAT GAIN FROM OUTDOOR VENTILATION AIR
CTSENS	TOTAL SENSIBLE HEAT GAIN
CPLAT	LATENT HEAT GAIN FROM PEOPLE
COAL	LATENT HEAT GAIN FROM OUTDOOR VENTILATION AIR
CTLAT	TOTAL LATENT HEAT GAIN
CTOT	TOTAL HEAT GAIN (SENSIBLE + LATENT)

HEATING LOAD BREAKDOWN

HROOF	HEAT LOSS FROM ROOF
HWALL	HEAT LOSS FROM EXTERIOR WALLS
HPART	HEAT LOSS FROM PARTITIONS
HGLASS	HEAT LOSS FROM GLAZING
HSLAB	HEAT LOSS FROM SLAB
HSPACE	TOTAL HEAT LOSS FROM SPACE
HOA	HEAT LOSS FROM OUTDOOR VENTILATION AIR
HTOT	TOTAL HEAT LOSS

EQUIPMENT MARK	CROOF	CWALL	CPART	CGLASS	CSOLAR	CLIGHTS	CEQUIP	CPSENS	CSSENS	CFAN	COAS	CTSENS	CPLAT	COAL	CTLAT	CTOT	HROOF	HWALL	HPART	HGLASS	HSPACE	HSLAB	HOA	HTOT
CU-1	0.07	0	0	0	0	0.19	12.25	0	12.51	0	0	12.51	0	0	0	12.51	0.15	0	0	0	4.51	0.1	0	0.25
ECH-1	0.14	0.53	0	0	0	0.38	0	0	1.05	0	0	1.05	0	0	0	1.05	0.3	1.97	0	0	22.88	0.32	0	2.59
EF-4	0.15	0.43	0	0	0	0.43	12.25	0	13.26	0	0	13.26	0	0	0	13.26	0.34	1.67	0	0	18.58	0.35	0	2.36
GFUH-1	1.59	1.17	0	0	0	4.46	0	0	7.22	0	2.96	10.18	0	4.12	4.12	14.31	3.48	4.33	0	0	19.2	3.66	13.66	25.12
RTU-1	3.87	3.09	0	0.68	1.57	10.83	8.77	16.61	45.94	1.14	7.16	54.24	10.4	9.98	20.38	74.61	7.64	10.13	0	3.71	28.59	7.87	33.04	62.39
RTU-2	4.25	0	0	0	0	11.9	27.28	14	57.44	1.49	10.02	68.95	11.2	13.97	25.17	94.12	9.23	0	0	0	17.91	6.42	46.28	61.93
RTU-3	1.95	2.45	0	0	0	5.45	21.83	6.75	38.43	0.96	6.21	45.6	5.4	8.66	14.06	59.66	4.21	9.1	0	0	29.38	4.37	28.69	46.37
RTU-4	0.94	0.76	0	0	0	2.64	16.14	2.07	22.55	0.14	2.88	25.57	1.4	4.01	5.41	30.98	2.06	2.82	0	0	31.08	2.16	13.29	20.32

HVAC VENTILATION SCHEDULE

NUMBER	NAME	AREA	LEVEL	CEILING HEIGHT	AIR CHGS	OA CHGS	PEOPLE	OA PER PERSON	OA PER SQ FT.	REQ SUP	ACT SUP	REQ OA	ACT OA	ACT RET	ACT EXH	CRIT OA	PRESSURE	PCT OPERABLE	NATURAL VENTILATION
102	FUTURE PHARMACY	654 SF	Level 1	15' - 0"	0	0	7	5	0.18	930	1100	191	191	1100	0	17.4	Neutral		False
103	EXAM 6	93 SF	Level 1	15' - 0"	4	2	2	0	0	150	150	33	33	150	0	23.2	Neutral		False
104	EXAM 7	93 SF	Level 1	15' - 0"	4	2	2	0	0	150	150	33	33	150	0	23.2	Neutral		False
105	ELECTRICAL/FIRE	127 SF	Level 1	15' - 0"	0	0	0	0	0	615	615	0	0	615	650	0	Negative		False
106	JANITOR	46 SF	Level 1	15' - 0"	10	0	0	0	0	15	20	4	4	20	100	0	Negative		False
107	BREAK ROOM	198 SF	Level 1	15' - 0"	0	0	6	5	0.06	235	235	51	51	0	340	22.3	Negative		False
108	EXAM 3	95 SF	Level 1	15' - 0"	4	2	2	0	0	155	155	33	33	155	0	23	Neutral		False
109	EXAM 2	95 SF	Level 1	15' - 0"	4	2	2	0	0	155	155	33	33	155	0	23	Neutral		False
110	EXAM 11	93 SF	Level 1	15' - 0"	4	2	2	0	0	155	155	33	33	155	0	22.5	Neutral		False
111	EXAM 10	93 SF	Level 1	15' - 0"	4	2	2	0	0	155	155	33	33	155	0	22.5	Neutral		False
112	OFFICE 3	90 SF	Level 1	15' - 0"	0	0	1	5	0.06	70	70	16	16	70	0	18.6	Neutral		False
113	MEN'S RESTROOM	131 SF	Level 1	15' - 0"	10	0	0	0	0	40	110	23	23	0	210	0	Negative		False
114	WOMEN'S RESTROOM	150 SF	Level 1	15' - 0"	10	0	0	0	0	45	130	27	27	0	230	0	Negative		False
115	EXAM 12	93 SF	Level 1	15' - 0"	4	2	2	0	0	155	155	33	33	155	0	22.5	Neutral		False
116	BARIATRIC EXAM ROOM 14	115 SF	Level 1	15' - 0"	4	2	2	0	0	160	160	35	35	160	0	27	Neutral		False
117	OFFICE 1	90 SF	Level 1	15' - 0"	0	0	1	5	0.06	70	70	16	16	70	0	18.5	Neutral		False
118	OFFICE 2	91 SF	Level 1	15' - 0"	0	0	1	5	0.06	70	70	16	16	70	0	18.7	Neutral		False
119	EXAM 1	99 SF	Level 1	15' - 0"	4	2	2	0	0	150	150	33	33	150	0	24.7	Neutral		False
120	CLINIC RESTROOM	69 SF	Level 1	15' - 0"	10	0	0	0	0	20	20	4	4	0	110	0	Negative		False
121	LAB	120 SF	Level 1	15' - 0"	6	2	1	0	0	165	165	37	37	265	0	27.3	Negative		False
122	OUTREACH STORAGE	53 SF	Level 1	15' - 0"	2	0	0	0	0	20	20	4	4	0	0	0	Positive		False
123	CALL ROOM	65 SF	Level 1	15' - 0"	0	0	1	5	0.06	75	75	16	16	75	0	14.8	Neutral		False
124	EXAM 13	93 SF	Level 1	15' - 0"	4	2	2	0	0	155	155	33	33	155	0	22.5	Neutral		False
125	IT	56 SF	Level 1	15' - 0"	0	0	0	0	0	610	610	0	0	610	0	0	Neutral		False
126	EXAM 5	95 SF	Level 1	15' - 0"	4	2	2	0	0	155	155	33	33	155	0	23	Neutral		False
127	EXAM 4	95 SF	Level 1	15' - 0"	4	2	2	0	0	155	155	33	33	155	0	23	Neutral		False
128	CONSULT	100 SF	Level 1	15' - 0"	0	0	2	5	0.06	90	90	19	19	90	0	22.2	Neutral		False
129	EXAM 8	93 SF	Level 1	15' - 0"	4	2	2	0	0	150	150	33	33	150	0	23.2	Neutral		False
130	EXAM 9	92 SF	Level 1	15' - 0"	4	2	2	0	0	145	145	32	32	145	0	23.7	Neutral		False
131	SHELL SPACE	1308 SF	Level 1	15' - 0"	0	0	0	0	0.12	355	355	196	196	355	0	55.3	Neutral		False
132	SUPPLY STORAGE	75 SF	Level 1	15' - 0"	2	0	0	0	0	25	25	5	5	0	0	0	Positive		False
133	EMPLOYEE RESTROOM	59 SF	Level 1	15' - 0"	10	0	0	0	0	15	20	4	4	0	100	0	Negative		False
135	ENROLLMENT	90 SF	Level 1	15' - 0"	0	0	2	5	0.06	80	80	18	18	80	0	24.1	Neutral		False
136	OUTREACH	152 SF	Level 1	14' - 11 13/16"	0	0	5	5	0.06	280	280	58	58	280	0	15.2	Neutral		False
137	CONFERENCE	172 SF	Level 1	15' - 0"	0	0	9	5	0.06	250	250	56	56	250	0	27.7	Neutral		False
138	RECEPTION	831 SF	Level 1	15' - 0"	0	0	25	5	0.06	730	900	187	187	900	0	24.3	Neutral		False
139	EXISTING VESTIBULE	113 SF	Level 1	15' - 0 1/8"	0	0	0	0	0	55	55	0	0	55	0	0	Neutral		False
140	HALLWAY	133 SF	Level 1	15' - 0"	2	0	0	0	0	40	40	9	9	40	0	0	Neutral		False
141	AISLE 4	273 SF	Level 1	14' - 11 31/32"	2	0	0	0	0	85	85	19	19	85	0	0	Neutral		False
142	HALLWAY	214 SF	Level 1	15' - 0"	2	0	0	0	0	65	65	14	14	65	0	0	Neutral		False
143	AISLE 3	212 SF	Level 1	15' - 0 3/32"	2	0	0	0	0	65	65	14	14	65	0	0	Neutral		False
144	AISLE 2	232 SF	Level 1	14' - 11 15/16"	2	0	0	0	0	70	70	16	16	70	0	0	Neutral		False
145	AISLE 1	304 SF	Level 1	14' - 11 7/8"	2	0	0	0	0	95	95	21	21	95	0	0	Neutral		False
146	CARE TEAM 1	454 SF	Level 1	15' - 0"	0	0	11	5	0.06	440	440	98	98	440	0	23.4	Neutral		False
147	MEDICAL STORAGE	46 SF	Level 1	15' - 0"	2	0	0	0	0	15	20	4	4	0	0	0	Positive		False
148	CARE TEAM 3	127 SF	Level 1	15' - 0"	0	0	6	5	0.06	205	205	46	46	205	0	22.9	Neutral		False
149	CARE TEAM 2	441 SF	Level 1	14' - 11 31/32"	0	0	14	5	0.06	470	470	105	105	470	0	25.7	Neutral		False
150	HALLWAY	134 SF	Level 1	15' - 0"	2	0	0	0	0	45	45	9	9	45	0	0	Neutral		False
151	COMMUNITY ROOM	732 SF	Level 1	15' - 0 1/32"	0	0	22	5	0.06	575	800	166	166	800	0	24.1	Neutral		False
TOTAL		9482 SF																	

MECHANICAL/ELECTRICAL ENGINEERS
WWW.KLHENGRS.COM
LEXINGTON, KENTUCKY
LOUISVILLE, KENTUCKY
CINCINNATI, OHIO
NEW YORK, NEW YORK
KLH #: 25588

KLH ENGINEERS
KOHRS LONNEMANN HEIL ENGINEERS, INC.
1538 ALEXANDRIA PIKE, SUITE 11
FT. THOMAS, KENTUCKY 41075
859-442-8050 859-442-8058
859-442-8058 FAX

Project

Oak St. Health

520 PENN AVENUE,
WILKINSBURG, PA

Architect

MOODY•NOLAN
300 Spruce Street Phone: (614) 461-4664
Suite 300 Fax: (614) 280-8881
Columbus, Ohio 43215 www.moodynolan.com

Seal:

COMMONWEALTH OF PENNSYLVANIA
REGISTERED PROFESSIONAL
KRIS SCHNITGEN
ENGINEER
PE-087168
9/27/2023

Versions

No.	Date	Description

Sheet Title

MECHANICAL - SCHEDULES

Issue Date: 09/05/2023

Drawn: KSL

Project No. 25588

Sheet No.

M-602

COM*check* Software Version COMcheckWeb

Mechanical Compliance Certificate

Project Information

Energy Code:	90.1 (2016) Standard
Project Title:	25588.00 - Oak Street Health - 520 Penn Ave, Wilkinsburg, PA
Location:	Wilkinsburg, Pennsylvania
Climate Zone:	5a
Project Type:	Alteration

Construction Site: Owner/Agent: Designer/Contractor:

Mechanical Systems List

Quantity System Type & Description

1 New 3 ton RTU
Heating: 1 each - Central Furnace, Gas, Capacity = 81 kBtu/h
Proposed Efficiency = 80.00% Et, Required Efficiency: 80.00 % Et (or 78% AFUE)
Cooling: 36 each - Single Package DX Unit, Capacity = 36 kBtu/h, Air-Cooled Condenser
Proposed Efficiency = 13.00 SEER, Required Efficiency = 14.00 SEER
Proposed Part Load Efficiency = 0.00 , Required Part Load Efficiency = 0.00
Fan System: FAN SYSTEM 1 -- Compliance (Motor nameplate HP and fan efficiency method) : Passes

Fans:
FAN 1 Supply, Constant Volume, 1100 CFM, 1.0 motor nameplate hp, 0.0 fan efficiency grade, 0.0 total fan efficiency, 0.0 design fan efficiency , fan exception: Single fan <= 5HP

SYSTEM COMPLIANCE FAILS: PROPOSED EFFICIENCY FAILS TO MEET CODE REQUIREMENTS.

1 New 5 ton RTU
Heating: 1 each - Central Furnace, Gas, Capacity = 81 kBtu/h
Proposed Efficiency = 80.00% Et, Required Efficiency: 80.00 % Et (or 78% AFUE)
Cooling: 36 each - Single Package DX Unit, Capacity = 60 kBtu/h, Air-Cooled Condenser, Air Economizer
Proposed Efficiency = 13.00 SEER, Required Efficiency = 14.00 SEER
Proposed Part Load Efficiency = 0.00 , Required Part Load Efficiency = 0.00
Fan System: FAN SYSTEM 2 -- Compliance (Motor nameplate HP and fan efficiency method) : Passes

Fans:
FAN 2 Supply, Constant Volume, 1910 CFM, 1.0 motor nameplate hp, 0.0 fan efficiency grade, 0.0 total fan efficiency, 0.0 design fan efficiency , fan exception: Single fan <= 5HP

SYSTEM COMPLIANCE FAILS: PROPOSED EFFICIENCY FAILS TO MEET CODE REQUIREMENTS.

1 New 7.5 ton RTU
Heating: 1 each - Central Furnace, Gas, Capacity = 200 kBtu/h
Proposed Efficiency = 80.00% Et, Required Efficiency: 80.00 % Et (or 78% AFUE)
Cooling: 36 each - Single Package DX Unit, Capacity = 92 kBtu/h, Air-Cooled Condenser, Air Economizer
Proposed Efficiency = 11.00 EER, Required Efficiency = 11.00 EER
Proposed Part Load Efficiency = 12.70 IEER, Required Part Load Efficiency = 12.70 IEER
Fan System: FAN SYSTEM 3 -- Compliance (Motor nameplate HP and fan efficiency method) : Passes

Fans:
FAN 3 Supply, Single-Zone VAV, 2980 CFM, 2.0 motor nameplate hp, 0.0 fan efficiency grade, 0.0 total fan efficiency, 0.0 design fan efficiency , fan exception: Single fan <= 5HP

SYSTEM VERIFICATION REQUIRED.

1 New 6 ton RTU
Heating: 1 each - Central Furnace, Gas, Capacity = 200 kBtu/h
Proposed Efficiency = 80.00% Et, Required Efficiency: 80.00 % Et (or 78% AFUE)
Cooling: 36 each - Single Package DX Unit, Capacity = 72 kBtu/h, Air-Cooled Condenser, Air Economizer
Proposed Efficiency = 11.00 EER, Required Efficiency = 11.00 EER

Quantity System Type & Description

Proposed Part Load Efficiency = 12.70 IEER, Required Part Load Efficiency = 12.70 IEER
Fan System: FAN SYSTEM 4 -- Compliance (Motor nameplate HP and fan efficiency method) : Passes

Fans:
FAN 4 Supply, Single-Zone VAV, 2285 CFM, 2.0 motor nameplate hp, 0.0 fan efficiency grade, 0.0 total fan efficiency, 0.0 design fan efficiency , fan exception: Single fan <= 5HP

SYSTEM VERIFICATION REQUIRED.

1 Water Heater
Electric Storage Water Heater, Capacity: 30 gallons w/ Circulation Pump
No minimum efficiency requirement applies

SWH COMPLIANCE REQUIRED.

COM*check* Software Version COMcheckWeb

Inspection Checklist

Energy Code: 90.1 (2016) Standard

Requirements: 100.0% were addressed directly in the COM*check* software

Text in the "Comments/Assumptions" column is provided by the user in the COMcheck Requirements screen. For each requirement, the user certifies that a code requirement will be met and how that is documented, or that an exception is being claimed. Where compliance is itemized in a separate table, a reference to that table is provided.

Section # & Req.ID	Plan Review	Complies?	Comments/Assumptions
4.2.2, 6.4.4.2.1, 6.7.2 [PR2][1]	Plans, specifications, and/or calculations provide all information with which compliance can be determined for the mechanical systems and equipment and document where exceptions to the standard are claimed. Load calculations per acceptable engineering standards and handbooks.	☐Complies ☐Does Not ☐Not Observable ☐Not Applicable	Requirement will be met.
4.2.2, 7.7.1, 10.4.2 [PR3][1]	Plans, specifications, and/or calculations provide all information with which compliance can be determined for the service water heating systems and equipment and document where exceptions to the standard are claimed. Hot water system sized per manufacturer's sizing guide.	☐Complies ☐Does Not ☐Not Observable ☐Not Applicable	Requirement will be met.
4.2.2, 8.4.1.1, 8.4.1.2, 8.7 [PR6][2]	Plans, specifications, and/or calculations provide all information with which compliance can be determined for the electrical systems and equipment and document where exceptions are claimed. Feeder connectors sized in accordance with approved plans and branch circuits sized for maximum drop of 3%.	☐Complies ☐Does Not ☐Not Observable ☐Not Applicable	Requirement will be met.
6.7.2.4 [PR5][1]	Detailed instructions for HVAC systems commissioning included on the plans or specifications for projects >=50,000 ft2.	☐Complies ☐Does Not ☐Not Observable ☐Not Applicable	**Exception:** Requirement does not apply.

Additional Comments/Assumptions:

1	High Impact (Tier 1)	2	Medium Impact (Tier 2)	3	Low Impact (Tier 3)

Section # & Req.ID	Footing / Foundation Inspection	Complies?	Comments/Assumptions
6.4.3.7 [F09][3]	Freeze protection and snow/ice melting system sensors for future connection to controls.	☐Complies ☐Does Not ☐Not Observable ☐Not Applicable	**Exception:** Requirement does not apply.

Additional Comments/Assumptions:

1	High Impact (Tier 1)	2	Medium Impact (Tier 2)	3	Low Impact (Tier 3)

Section # & Req.ID	Plumbing Rough-In Inspection	Complies?	Comments/Assumptions
7.4.4.1 [PL2][1]	Temperature controls installed on service water heating systems (<=120ºF to maximum temperature for intended use).	☐Complies ☐Does Not ☐Not Observable ☐Not Applicable	Requirement will be met.
7.4.4.2 [PL3][1]	Automatic time switches installed to automatically switch off the recirculating hot-water system or heat trace.	☐Complies ☐Does Not ☐Not Observable ☐Not Applicable	Requirement will be met.

Additional Comments/Assumptions:

1	High Impact (Tier 1)	2	Medium Impact (Tier 2)	3	Low Impact (Tier 3)

Section # & Req.ID	Mechanical Rough-In Inspection	Plans Verified Value	Field Verified Value	Complies?	Comments/Assumptions
6.4.1.4, 6.4.1.5 [ME1][2]	HVAC equipment efficiency verified. Non-NAECA HVAC equipment labeled as meeting 90.1.	Efficiency:____	Efficiency:____	☐Complies ☐Does Not ☐Not Observable ☐Not Applicable	*See the Mechanical Systems list for values.*
6.4.3.4.1 [ME3][3]	Stair and elevator shaft vents have motorized dampers that automatically close.			☐Complies ☐Does Not ☐Not Observable ☐Not Applicable	**Exception:** Requirement does not apply.
6.4.3.4.2, 6.4.3.4.3 [ME4][3]	Outdoor air and exhaust systems have motorized dampers that automatically shut when not in use and meet maximum leakage rates. Check gravity dampers where allowed.			☐Complies ☐Does Not ☐Not Observable ☐Not Applicable	Requirement will be met.
6.4.3.4.5 [ME39][3]	Enclosed parking garage ventilation has automatic contaminant detection and capacity to stage or modulate fans to 50% or less of design capacity.			☐Complies ☐Does Not ☐Not Observable ☐Not Applicable	**Exception:** Requirement does not apply.
6.4.3.4.4 [ME5][3]	Ventilation fans >0.75 hp have automatic controls to shut off fan when not required.			☐Complies ☐Does Not ☐Not Observable ☐Not Applicable	Requirement will be met.
6.4.3.8 [ME6][1]	Demand control ventilation provided for spaces >500 ft2 and >25 people/1000 ft2 occupant density and served by systems with air side economizer, auto modulating outside air damper control, or design airflow >3,000 cfm.			☐Complies ☐Does Not ☐Not Observable ☐Not Applicable	Requirement will be met.
6.5.3.2.1 [ME40][2]	DX cooling systems >= 75 kBtu/h (>= 65 kBtu/h effective 1/2016) and chilled-water and evaporative cooling fan motor hp >= ¼ designed to vary supply fan airflow as a function of load and comply with operational requirements.			☐Complies ☐Does Not ☐Not Observable ☐Not Applicable	Requirement will be met. *See the Mechanical Systems list for values.*
6.4.4.1.1 [ME7][3]	Insulation exposed to weather protected from damage. Insulation outside of the conditioned space and associated with cooling systems is vapor retardant.			☐Complies ☐Does Not ☐Not Observable ☐Not Applicable	Requirement will be met.
6.4.4.1.2 [ME8][2]	HVAC ducts and plenums insulated per Table 6.8.2. Where ducts or plenums are installed in or under a slab, verification may need to occur during Foundation Inspection.	R-____	R-____	☐Complies ☐Does Not ☐Not Observable ☐Not Applicable	Requirement will be met.
6.4.4.1.3 [ME9][2]	HVAC piping insulation thickness. Where piping is installed in or under a slab, verification may need to occur during Foundation Inspection.	____ in.	____ in.	☐Complies ☐Does Not ☐Not Observable ☐Not Applicable	Requirement will be met.
6.4.4.1.4 [ME41][3]	Thermally ineffective panel surfaces of sensible heating panels have insulation >= R-3.5.			☐Complies ☐Does Not ☐Not Observable ☐Not Applicable	**Exception:** Requirement does not apply.

1	High Impact (Tier 1)	2	Medium Impact (Tier 2)	3	Low Impact (Tier 3)

Section # & Req.ID	Mechanical Rough-In Inspection	Plans Verified Value	Field Verified Value	Complies?	Comments/Assumptions
6.4.4.2.1 [ME10][2]	Ducts and plenums having pressure class ratings are Seal Class A construction.			☐Complies ☐Does Not ☐Not Observable ☐Not Applicable	Requirement will be met.
6.8.1-15, 6.8.1-16 [ME110][2]	Electrically operated DX-DOAS units meet requirements per Tables 6.8.1-15 or 6.8.1-16.			☐Complies ☐Does Not ☐Not Observable ☐Not Applicable	**Exception:** Requirement does not apply.
6.4.4.2.2 [ME11][3]	Ductwork operating >3 in. water column requires air leakage testing.			☐Complies ☐Does Not ☐Not Observable ☐Not Applicable	**Exception:** Requirement does not apply.
6.5.2.3 [ME19][3]	Dehumidification controls provided to prevent reheating, recooling, mixing of hot and cold airstreams or concurrent heating and cooling of the same airstream.			☐Complies ☐Does Not ☐Not Observable ☐Not Applicable	Requirement will be met.
6.5.2.4.1 [ME68][3]	Humidifiers with airstream mounted preheating jackets have preheat auto-shutoff value set to activate when humidification is not required.			☐Complies ☐Does Not ☐Not Observable ☐Not Applicable	**Exception:** Requirement does not apply.
6.5.2.4.2 [ME69][3]	Humidification system dispersion tube hot surfaces in the airstreams of ducts or air-handling units insulated >= R-0.5.			☐Complies ☐Does Not ☐Not Observable ☐Not Applicable	**Exception:** Requirement does not apply.
6.5.2.5 [ME70][3]	Preheat coils controlled to stop heat output whenever mechanical cooling, including economizer operation, is active.			☐Complies ☐Does Not ☐Not Observable ☐Not Applicable	Requirement will be met.
6.5.2.6 [ME106][3]	Units that provide ventilation air to multiple zones and operate in conjunction with zone heating and cooling systems are prevented from using heating or heat recovery to warm supply air above 60°F when representative building loads or outdoor air temperature indicate that most zones demand cooling.			☐Complies ☐Does Not ☐Not Observable ☐Not Applicable	**Exception:** Requirement does not apply.
6.5.3.6 [ME72][2]	Motors for fans >= 1/12 hp and < 1 hp are electronically-commutated motors or have a minimum motor efficiency of 70%. These motors are also speed adjustable for either balancing or remote control.			☐Complies ☐Does Not ☐Not Observable ☐Not Applicable	Requirement will be met.

1	High Impact (Tier 1)	2	Medium Impact (Tier 2)	3	Low Impact (Tier 3)

Section # & Req.ID	Mechanical Rough-In Inspection	Plans Verified Value	Field Verified Value	Complies?	Comments/Assumptions
6.5.3.4 [ME108][2]	Parallel-flow fan-powered VAV air terminals have automatic controls to a) turn off the terminal fan except when space heating is required or if required for ventilation; b) turn on the terminal fan as the first stage of heating before the heating coil is activated; and c) during heating for warmup or setback temperature control, either operate the terminal fan and heating coil without primary air or reverse the terminal damper logic and provide heating from the central air handler through primary air.			☐Complies ☐Does Not ☐Not Observable ☐Not Applicable	**Exception:** Requirement does not apply.
6.5.3.7 [ME109][2]	Required minimum outdoor air rate is the larger of minimum outdoor air rate or minimum exhaust air rate required by Standard 62.1. Standard 170, or applicable codes or accreditation standards. Outdoor air ventilation systems shall comply with one of the following: a) design minimum system outdoor air provided < 135% of the required minimum outdoor air rate, b) dampers, ductwork, and controls allow the system to supply <= the required minimum outdoor air rate with a single set-point adjustment., or c) system includes exhaust air energy recovery complying with Section 6.5.6.1.			☐Complies ☐Does Not ☐Not Observable ☐Not Applicable	Requirement will be met.
6.5.3.3 [ME42][1]	Multiple zone VAV systems with DDC of individual zone boxes have static pressure setpoint reset controls.			☐Complies ☐Does Not ☐Not Observable ☐Not Applicable	**Exception:** Requirement does not apply. *See the Mechanical Systems list for values.*
6.5.4.2 [ME25][3]	HVAC pumping systems with >= 3 control values designed for variable fluid flow (see section details).			☐Complies ☐Does Not ☐Not Observable ☐Not Applicable	**Exception:** Requirement does not apply.
6.5.6.1 [ME56][1]	Exhaust air energy recovery on systems meeting Tables 6.5.6.1-1, and 6.5.6.1-2.			☐Complies ☐Does Not ☐Not Observable ☐Not Applicable	**Exception:** Requirement does not apply.
6.5.7.1 [ME100][2]	Conditioned supply air to space with mechanical exhaust <= the greater of criteria of supply flow, required ventilation rate, exhaust flow minu the available transffer air (see section details).			☐Complies ☐Does Not ☐Not Observable ☐Not Applicable	Requirement will be met.
6.5.7.2.1 [ME32][2]	Kitchen hoods >5,000 cfm have make up air >=50% of exhaust air volume.			☐Complies ☐Does Not ☐Not Observable ☐Not Applicable	**Exception:** Requirement does not apply.

1	High Impact (Tier 1)	2	Medium Impact (Tier 2)	3	Low Impact (Tier 3)

MECHANICAL/ELECTRICAL ENGINEERS
WWW.KLHENGRS.COM
LEXINGTON, KENTUCKY
LOUISVILLE, KENTUCKY
COLUMBUS, OHIO
NEW YORK, NEW YORK
KLH #: 25588
KLH ENGINEERS
KOHRS LONNEMANN HEIL ENGINEERS, INC.
1538 ALEXANDRIA PIKE, SUITE 11
FT. THOMAS, KENTUCKY 41075
859-442-8050 859-442-8060
859-442-8058 FAX

Project

Oak St. Health
520 PENN AVENUE,
WILKINSBURG, PA

Architect

MOODY•NOLAN
300 Spruce Street Phone: (614) 461-4664
Suite 300 Fax: (614) 280-8881
Columbus, Ohio 43215 www.moodynolan.com

Seal:

COMMONWEALTH OF PENNSYLVANIA
REGISTERED PROFESSIONAL
KRIS SCHNITGEN
ENGINEER
PE-087168
9/27/2023

Versions

No.	Date	Description

Sheet Title

MECHANICAL ENERGY COMPLIANCE

Issue Date: 09/05/2023

Drawn: KSL
Project No. 25588

Sheet No.

M-603

Section # & Req.ID	Mechanical Rough-In Inspection	Plans Verified Value	Field Verified Value	Complies?	Comments/Assumptions
6.5.7.2.4 [ME49][1]	Approved field test used to evaluate design air flow rates and demonstrate proper capture and containment of kitchen exhaust systems.			☐Complies ☐Does Not ☐Not Observable ☐Not Applicable	**Exception:** Requirement does not apply.
6.5.8.1 [ME34][2]	Unenclosed spaces that are heated use only radiant heat.			☐Complies ☐Does Not ☐Not Observable ☐Not Applicable	**Exception:** Requirement does not apply.
6.5.9 [ME35][1]	Hot gas bypass limited to: <=240 kBtu/h – 15% >240 kBtu/h – 10%			☐Complies ☐Does Not ☐Not Observable ☐Not Applicable	Requirement will be met.
7.4.2 [ME36][2]	Service water heating equipment meets efficiency requirements.			☐Complies ☐Does Not ☐Not Observable ☐Not Applicable	
6.4.3.9 [ME63][2]	Heating for vestibules and air curtains with integral heating include automatic controls that shut off the heating system when outdoor air temperatures > 45F. Vestibule heating and cooling systems controlled by a thermostat in the vestibule with heating setpoint <= 60F and cooling setpoint >= 80F.			☐Complies ☐Does Not ☐Not Observable ☐Not Applicable	Requirement will be met.
6.5.10 [ME73][3]	Doors separating conditioned space from the outdoors have controls that disable/reset heating and cooling system when open.			☐Complies ☐Does Not ☐Not Observable ☐Not Applicable	**Exception:** Building entrances have automatic closing devices.

Additional Comments/Assumptions:

1	High Impact (Tier 1)	2	Medium Impact (Tier 2)	3	Low Impact (Tier 3)

Section # & Req.ID	Rough-In Electrical Inspection	Complies?	Comments/Assumptions
8.4.2 [EL10][2]	At least 50% of all 125 volt 15- and 20-Amp receptacles are controlled by an automatic control device.	☐Complies ☐Does Not ☐Not Observable ☐Not Applicable	Requirement will be met.
8.4.3 [EL11][2]	New buildings have electrical energy use measurement devices installed. Where tenant spaces exist, each tenant is monitored separately. In buildings with a digital control system the energy use is transmitted to to control system and displayed graphically.	☐Complies ☐Does Not ☐Not Observable ☐Not Applicable	**Exception:** Buildings 25,000 ft2.
10.4.1 [EL9][2]	Electric motors meet requirements where applicable.	☐Complies ☐Does Not ☐Not Observable ☐Not Applicable	Requirement will be met.

Additional Comments/Assumptions:

1	High Impact (Tier 1)	2	Medium Impact (Tier 2)	3	Low Impact (Tier 3)

Section # & Req.ID	Final Inspection	Complies?	Comments/Assumptions
6.4.3.1.2 [FI3][3]	Thermostatic controls have a 5 °F deadband.	☐Complies ☐Does Not ☐Not Observable ☐Not Applicable	Requirement will be met.
6.4.3.2 [FI20][3]	Temperature controls have setpoint overlap restrictions.	☐Complies ☐Does Not ☐Not Observable ☐Not Applicable	Requirement will be met.
6.4.3.3.1 [FI21][3]	HVAC systems equipped with at least one automatic shutdown control.	☐Complies ☐Does Not ☐Not Observable ☐Not Applicable	Requirement will be met.
6.4.3.3.2 [FI22][3]	Setback controls allow automatic restart and temporary operation as required for maintenance.	☐Complies ☐Does Not ☐Not Observable ☐Not Applicable	Requirement will be met.
6.4.3.12 [FI200][3]	Air economizer has a fault detection and diagnostics (FDD) system (see details for configuration and operational requirements).	☐Complies ☐Does Not ☐Not Observable ☐Not Applicable	Requirement will be met.
6.4.3.6 [FI6][3]	When humidification and dehumidification are provided to a zone, simultaneous operation is prohibited. Humidity control prohibits the use of fossil fuel or electricity to produce RH > 30% in the warmest zone humidified and RH < 60% in the coldest zone dehumidified.	☐Complies ☐Does Not ☐Not Observable ☐Not Applicable	Requirement will be met.
6.7.2.1 [FI7][3]	Furnished HVAC as-built drawings submitted within 90 days of system acceptance.	☐Complies ☐Does Not ☐Not Observable ☐Not Applicable	Requirement will be met.
6.7.2.2 [FI8][3]	Furnished O&M manuals for HVAC systems within 90 days of system acceptance.	☐Complies ☐Does Not ☐Not Observable ☐Not Applicable	Requirement will be met.
6.7.2.3 [FI9][3]	An air and/or hydronic system balancing report is provided for HVAC systems serving zones >5,000 ft2 of conditioned area.	☐Complies ☐Does Not ☐Not Observable ☐Not Applicable	Requirement will be met.
6.7.2.4 [FI10][3]	HVAC control systems have been tested to ensure proper operation, calibration and adjustment of controls.	☐Complies ☐Does Not ☐Not Observable ☐Not Applicable	Requirement will be met.
7.4.4.3 [FI11][3]	Public lavatory faucet water temperature <=110°F.	☐Complies ☐Does Not ☐Not Observable ☐Not Applicable	Requirement will be met.
7.4.4.4 [FI12][3]	Controls are installed that limit the operation of a recirculation pump installed to maintain temperature of a storage tank.	☐Complies ☐Does Not ☐Not Observable ☐Not Applicable	Requirement will be met.

1	High Impact (Tier 1)	2	Medium Impact (Tier 2)	3	Low Impact (Tier 3)

Section # & Req.ID	Final Inspection	Complies?	Comments/Assumptions
10.4.3 [FI24][2]	Elevators are designed with the proper lighting, ventilation power, and standby mode.	☐Complies ☐Does Not ☐Not Observable ☐Not Applicable	**Exception:** Requirement does not apply.

Additional Comments/Assumptions:

1	High Impact (Tier 1)	2	Medium Impact (Tier 2)	3	Low Impact (Tier 3)

KLH ENGINEERS
MECHANICAL/ELECTRICAL ENGINEERS
WWW.KLHENGRS.COM
LEXINGTON, KENTUCKY
LOUISVILLE, KENTUCKY
COLUMBUS, OHIO
NEW YORK, NEW YORK
KLH #: 25588
KOHRS LONNEMANN HEIL ENGINEERS, INC.
1538 ALEXANDRIA PIKE, SUITE 11
FT. THOMAS, KENTUCKY 41075
859-442-9292 859-442-9950
859-442-8058 FAX

Project

Oak St. Health

520 PENN AVENUE,
WILKINSBURG, PA

Architect

MOODY•NOLAN
300 Spruce Street Phone: (614) 461-4664
Suite 300 Fax: (614) 280-8881
Columbus, Ohio 43215 www.moodynolan.com

Seal:

COMMONWEALTH OF PENNSYLVANIA
REGISTERED PROFESSIONAL
KRIS SCHNITGEN
ENGINEER
PE-087168
9/27/2023

Versions

No.	Date	Description

Sheet Title

MECHANICAL ENERGY COMPLIANCE

Issue Date: 09/05/2023

Drawn: KSL
Project No. 25588

Sheet No.

M-604

CODE INFORMATION

PLUMBING CODE	2015 PENNSYLVANIA STATE PLUMBING CODE W/ ALLEGHENY COUNTY AMENDMENTS
ENERGY CODE	2013 ASHRAE 90.1
FUEL GAS CODE	2015 INTERNATIONAL FUEL GAS CODE

PLUMBING LEGEND

SYMBOL	DESCRIPTION
PLAN-VIEW LINE TYPES	
	WORK SHOWN FADED INDICATES EXISTING WORK TO REMAIN OR NEW WORK BY OTHERS AS APPLICABLE
	WORK SHOWN BOLD-CONTINUOUS INDICATES NEW WORK
	DIRECTION OF FLOW

DRAWING SET APPEARANCE

TO BETTER COMMUNICATE SCOPE TO PERMIT AGENCIES AND CONTRACTORS, EACH DRAWING IN THIS DRAWING SET HAS BEEN CREATED IN BOTH "COLOR" AND "BLACK AND WHITE". THERE EXISTS A COLOR LAYER WITHIN EACH DRAWING WHERE VISIBILITY IS CONTROLLED THROUGH THE PDF LAYER MANAGER. THIS LAYER VISIBILITY CAN BE TOGGLED DISPLAYING EITHER "COLOR" OR "BLACK AND WHITE". TO MAINTAIN SCOPE BASED SHADING WHEN PRINTING TO PAPER, BLACK AND WHITE NEEDS TO BE VISIBLE.
FOR FURTHER INSTRUCTIONS, REFER TO CONTRACTOR RESOURCES ON OUR WEBSITE AND DOWNLOAD "DRAWING COLOR INSTRUCTIONS".
WWW.KLHENGRS.COM - CONTRACTOR RESOURCES (RIGHT HAND SIDE OF PAGE).

SYMBOL	DESCRIPTION
PLUMBING ACCESSORIES	
	UNION
	PIPE CAP
	STRAINER
	PRESSURE GAUGE
	THERMOMETER
	FCO - FLOOR CLEANOUT, GCO - GRADE CLEANOUT
	CO - CLEANOUT, WCO - WALL CLEANOUT
	FLOOR DRAIN, AREA DRAIN
	HUB DRAIN
	EXPANSION TANK
PIPE VALVES	
	SHUT-OFF VALVE
	CHECK VALVE
	BALANCING VALVE
	SOLENOID VALVE
	PRESSURE REGULATOR VALVE
	GAS PRESSURE REGULATOR
	PRESSURE AND TEMPERATURE RELIEF VALVE
	BACKFLOW PREVENTER
	DOUBLE CHECK VALVE BACKFLOW PREVENTER
	TRAP PRIMER VALVE
PLUMBING SYMBOLS	
	PIPE UP
	PIPE DOWN
	PIPE TEE DOWN
	PIPE TEE UP
	CONNECT TO EXISTING (FIELD VERIFY EXISTING UTILITY SERVICE TYPE, PRIOR TO MAKING CONNECTION)
	VENT THROUGH ROOF
PLUMBING MISCELLANEOUS	
	CIRCULATION PUMP, RETURN PUMP

STANDARD PLUMBING ABBREVIATIONS

AAV	AIR ADMITTANCE VALVE
AD	AREA DRAIN
AFF	ABOVE FINISHED FLOOR
AFG	ABOVE FINISHED GRADE
ANSI	AMERICAN NATIONAL STANDARDS INSTITUTE
APPROX	APPROXIMATE
ASPE	AMERICAN SOCIETY OF PLUMBING ENGINEERS
AV	ACID VENT
AW	ACID WASTE
BAS	BUILDING AUTOMATION SYSTEM
BFP	BACKFLOW PREVENTER
BT	BATHTUB
BTU	BRITISH THERMAL UNIT
BTUH	BRITISH THERMAL UNIT PER HOUR
BWV	BACK WATER VALVE
CA	COMPRESSED AIR
CB	CATCH BASIN
CFH	CUBIC FEET PER HOUR
CFM	CUBIC FEET PER MINUTE
CI	CAST IRON
CO	CLEAN OUT
CO2	CARBON DIOXIDE
CP	CIRCULATION PUMP
CW	DOMESTIC COLD WATER
DF	DRINKING FOUNTAIN
DI	DEIONIZED WATER
DIA	DIAMETER
DN	DOWN
DS	DOWNSPOUT
DSN	DOWNSPOUT NOZZLE
EC	ELECTRICAL CONTRACTOR
ET	EXPANSION TANK
EWC	ELECTRIC WATER COOLER
EWH	ELECTRIC WATER HEATER
EX	EXISTING
F	FAHRENHEIT
FCO	FLOOR CLEAN OUT
FD	FLOOR DRAIN
FFE	FINISHED FLOOR ELEVATION
FLA	FULL LOAD AMPERES
FS	FLOOR SINK
FT	FEET
FW	FILTERED WATER
G	GAS
GCO	GRADE CLEAN OUT
GWH	GAS FIRED WATER HEATER
GI	GREASE INTERCEPTOR
GPD	GALLONS PER DAY
GPH	GALLONS PER HOUR
GPM	GALLONS PER MINUTE
GPR	GAS PRESSURE REGULATOR
GW	GREASE WASTE
H&CW	HOT & COLD WATER
HB	HOSE BIBB
HC	HVAC CONTRACTOR
HD	HUB DRAIN
HP	HORSEPOWER
HW	DOMESTIC HOT WATER
HWR	HOT WATER RETURN
IE	INVERT ELEVATION
IN WC	INCH WATER COLUMN
KW	KILOWATT
KWH	KILOWATT HOUR
LPG	LIQUID PROPANE GAS
LV	LAVATORY
MAU	MAKEUP AIR UNIT
MAX	MAXIMUM
MBH	1000 BTUH
MH	MANHOLE
MIN	MINIMUM
MOCP	MAXIMUM OVERCURRENT PROTECTION
MS	MOP SINK
MV	MIXING VALVE
N	NITROGEN
NC	NORMALLY CLOSED
NIC	NOT IN CONTRACT
NO	NITROUS OXIDE
NOM	NOMINAL
NTS	NOT TO SCALE
O	OXYGEN
OCP	OVER CURRENT PROTECTION
OD	OVERFLOW DRAIN
OI	OIL INTERCEPTOR
PC	PLUMBING CONTRACTOR
PRV	PRESSURE REGULATING VALVE
PSI	POUNDS PER SQUARE INCH
RD	ROOF DRAIN
RH	ROOF HYDRANT
RO	REVERSE OSMOSIS
RPZ	REDUCED PRESSURE ZONE VALVE
RTU	ROOF TOP UNIT
S	SANITARY
SI	SOLIDS INTERCEPTOR
SK	SINK
SOFT	SOFT WATER
SPEC	SPECIFICATION
SQ FT	SQUARE FOOT (FEET)
ST	STORM PIPING
TD	TRENCH DRAIN
TEMP	TEMPERATURE
TMV	THERMOSTATIC MIXING VALVE
TP	TRAP PRIMER
UH	UNIT HEATER
UR	URINAL
VAC	VACUUM
VFD	VARIABLE FREQUENCY DRIVE
VP	VACUUM PUMP
VTR	VENT THRU ROOF
WAGD	WASTE ANESTHESIA GAS
WB	WASHER BOX
WC	WATER CLOSET
WCO	WALL CLEAN OUT
WH	WALL HYDRANT
WF	WATER FILTER
YH	YARD HYDRANT

DOMESTIC WATER PRESSURE ANALYSIS REPORT

Water Supply Fixture Units	70	WSFU
Additonal Non-WSFU Flow	0	gpm
Total Peak demand	58	gpm
PRESSURE LOSS ANALYSIS		
Pressure information is Assumed please notify engineer of record immediately if pressure is lower than assumed value!		
Design Flushing Type	Flush Valve	
Assumed Static Pressure	60	psi
Assumed Residual Pressure	60	psi
Pressure Losses in Piping	6	psi
Pressure Losses in Equipment	12	psi
Pressure Losses in Elevation	6	psi
Static Pressure at Controlling Fixture	44	psi
Residual Pressure at Controlling Fixture	36	psi
Pressure at the controlling fixture meets the design requirements.		
PRESSURE AT CONTROLLING FIXTURE		
Design Controlling Fixture Pressure	35	psi
Pump Required	NO	
Pressure Boost Required	---	psi
The domestic water system was engineered using the International Plumbing Code.		

FIELD VERIFY ALL CONDITIONS

DESIGN DRAWINGS ARE SCHEMATIC. THIS CONTRACTOR SHALL VISIT THE SITE PRIOR TO BIDDING OR AWARD OF CONTRACT TO INSPECT EXISTING FIELD CONDITIONS. THIS CONTRACT SHALL INCLUDE ALL LABOR AND MATERIALS NECESSARY FOR FIELD MODIFICATIONS DUE TO EXISTING CONDITIONS.

THE CONTRACTOR SHALL CONTACT THE ARCHITECT, ENGINEER OR OWNER PRIOR TO BIDDING FOR INTERPRETATIONS AND CLARIFICATIONS OF THE DESIGN AND INCLUDE IN HIS BID ALL COSTS TO MEET THE DESIGN INTENT. CLARIFICATIONS MADE BY THE ARCHITECT, ENGINEER OR OWNER AFTER BIDDING WILL BE FINAL AND SHALL BE IMPLEMENTED AT CONTRACTORS COST.

BIDDING CONTRACTORS SHALL HAVE A WORKING KNOWLEDGE OF LOCAL CODES AND ORDINANCES AND SHALL INCLUDE IN THEIR BIDS THE COSTS FOR ALL WORK INSTALLED IN STRICT ACCORDANCE WITH GOVERNING CODES, THE PLANS AND SPECIFICATIONS NOT WITHSTANDING. THE CONTRACTOR SHALL ALERT ARCHITECT, ENGINEER OR OWNER OF ANY APPARENT DISCREPANCIES BETWEEN GOVERNING CODES AND DESIGN INTENT.

KLH ENGINEERS
KOHRS LONNEMANN HEIL ENGINEERS, INC.
1538 ALEXANDRIA PIKE, SUITE 11
FT. THOMAS, KENTUCKY 41075
800-354-9783 859-442-8050
859-442-8058 FAX
MECHANICAL/ELECTRICAL ENGINEERS
WWW.KLHENGRS.COM
LEXINGTON, KENTUCKY
LOUISVILLE, KENTUCKY
COLUMBUS, OHIO
NEW YORK, NEW YORK
KLH #: 25588

Project
Oak St. Health
520 PENN AVENUE, WILKINSBURG, PA

Architect
MOODY•NOLAN
300 Spruce Street
Suite 300
Columbus, Ohio 43215
Phone: (614) 461-4664
Fax: (614) 280-8881
www.moodynolan.com

Seal:
COMMONWEALTH OF PENNSYLVANIA
REGISTERED PROFESSIONAL
KRIS SCHNITGEN
ENGINEER
PE-087168
9/27/2023

Versions

No.	Date	Description

Sheet Title
PLUMBING COVER SHEET

Issue Date: 09/05/2023
Drawn: Author
Project No.: 25588
Sheet No.
P-001

KEYED NOTES

P1	SEE INTERIOR WALL PENETRATION DETAIL ON SHEET P-501. TYPICAL ALL INTERIOR WALL PENETRATIONS FOR PIPING.
P2	EXISTING GAS METER TO REMAIN. VERIFY LOCATION ON SITE PRIOR TO START OF CONSTRUCTION. VERIFY EXISTING PRESSURE AND PIPE SIZE. REFER TO GAS LOAD SCHEDULE FOR MORE INFORMATION. COORDINATE NEW SERVICE REQUIREMENTS WITH LOCAL UTILITY. PROVIDE NEW GAS PIPING IF EXISTING DOES NOT MEET SIZES INDICATED ON PLAN VIEW.
P3	PROVIDE NEW ASSE 1024 RATED BACKFLOW PREVENTER.
P4	SEE TRAP PRIMER CONNECTION DETAIL ON SHEET P-501.
P5	PROVIDE 1/2" CW & HW FOR FUTURE PHARMACY SINK.
P6	SEE HOT WATER RECIRCULATION PUMP DETAIL ON SHEET P-501.
P10	SEE TYPICAL GAS CONNECTIONS TO EQUIPMENT DETAIL ON SHEET P-501.
P11	SEE THERMOSTATIC MIXING VALVE DETAIL ON SHEET P-501.
P13	SEE WATER HEATER DETAIL ON SHEET P-601.
P14	GAS PIPING UP TO ROOF.
P17	PROVIDE NEW WATER METER. COORDINATE NEW METER & SERVICE UPGRADE WITH LOCAL UTILITY. FIELD VERIFY EXACT LOCATION. CONFIRM WATER CAPACITY AND PRESSURE. NOTIFY OAK STREET HEALTH AND ENGINEER OF RECORD IF WATER PRESSURE IS LESS THAN INDICATED ON CALCULATIONS ON PLUMBING COVER SHEET.
P18	SEE CONNECTION TO COFFEE AND REFRIGERATOR DETAIL ON SHEET P-601. LOCATE BEHIND FIXTURE BEING SERVED. COMPRESSION FITTINGS AND PLASTIC FITTINGS NOT PERMITTED.
P19	PROVIDE 1/2" HOT WATER LINE TO DISHWASHER WITH BALL VALVE UNDER SINK.

Pipe Type Legend

Mark	Color	System Name	Pipe Material
C1.6		C1 - Domestic Cold Water	6 - Copper - Type L - ASTM B88
G1.26		G1 - Natural Gas	26 - Steel - Schedule 40 Metallic - ASTM A53
H1.6		H1 - Domestic Hot Water	6 - Copper - Type L - ASTM B88
HR1.6		HR1 - Hot Water Return	6 - Copper - Type L - ASTM B88

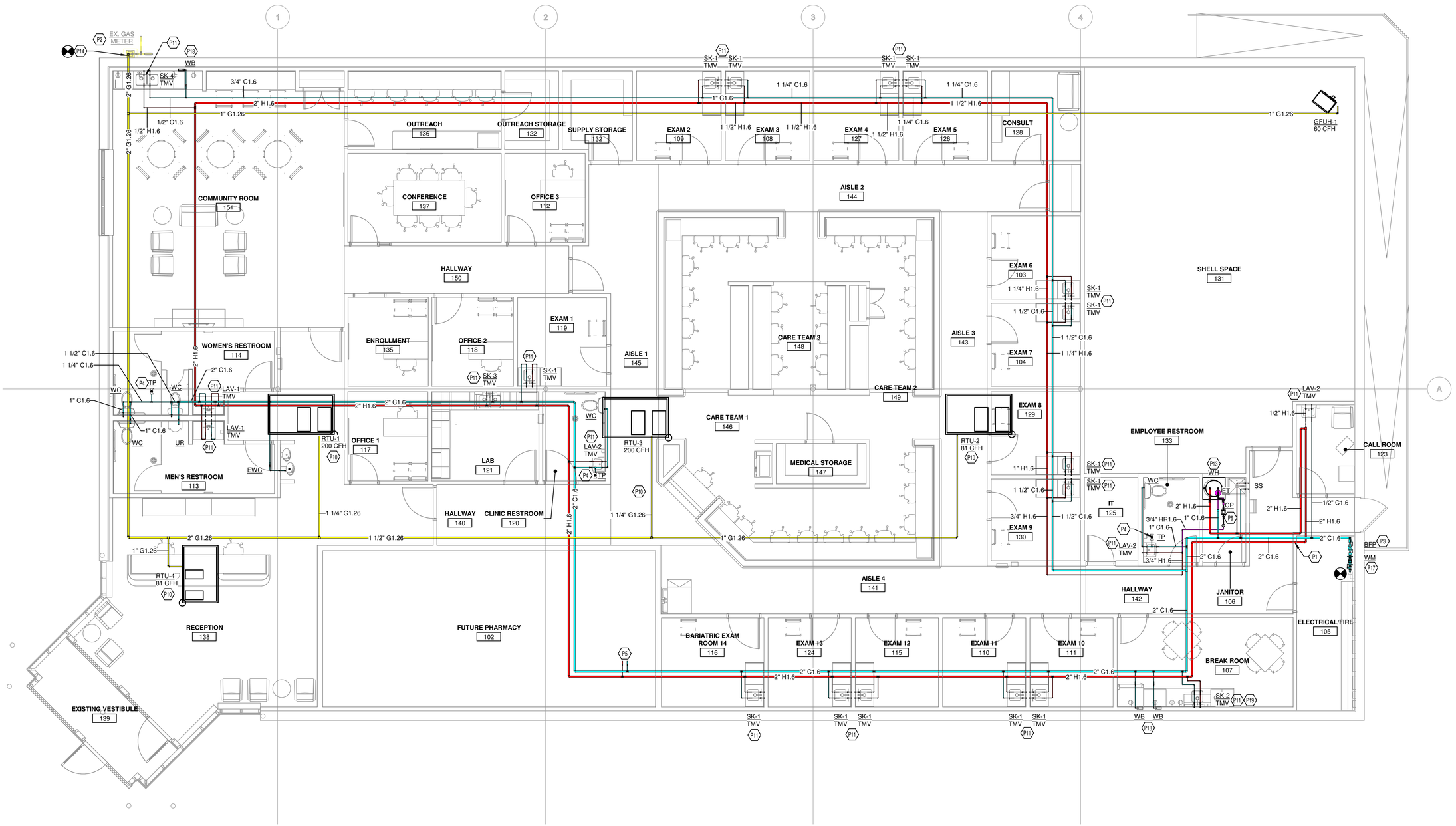

1 PLUMBING WATER & GAS PLAN
3/16" = 1'-0"

MECHANICAL/ELECTRICAL ENGINEERS
WWW.KLHENGRS.COM
LEXINGTON, KENTUCKY
LOUISVILLE, KENTUCKY
COLUMBUS, OHIO
NEW YORK, NEW YORK
KLH #: 25588

KLH ENGINEERS
KOHRS LONNEMANN HEIL ENGINEERS, INC.
1538 ALEXANDRIA PIKE, SUITE 11
FT. THOMAS, KENTUCKY 41075
859-442-8050 859-442-8050
859-442-8058 FAX

Project

Oak St. Health
520 PENN AVENUE,
WILKINSBURG, PA

Architect

MOODY•NOLAN
300 Spruce Street Phone: (614) 461-4664
Suite 300 Fax: (614) 280-8881
Columbus, Ohio 43215 www.moodynolan.com

Seal:

COMMONWEALTH OF PENNSYLVANIA
REGISTERED PROFESSIONAL
KRIS SCHNITGEN
ENGINEER
PE-087198-E
9/27/2023

Versions

No.	Date	Description

Sheet Title

PLUMBING WATER & GAS PLAN

Issue Date: 09/05/2023

Drawn: Author

Project No. 25588

Sheet No.

P-101

PER ALLEGHENY COUNTY HEALTH DEPARTMENT PLUMBING CODE SECTION AC-710.4, SANITARY DRAINAGE SYSTEMS INSTALLED UNDERGROUND OR BELOW A BASEMENT OR CELLAR FLOOR SHALL BE FOUR (4) INCHES IN DIAMETER.

KEYED NOTES

P1	SEE INTERIOR WALL PENETRATION DETAIL ON SHEET P-501. TYPICAL ALL INTERIOR WALL PENETRATIONS FOR PIPING.
P4	SEE TRAP PRIMER CONNECTION DETAIL ON SHEET P-501.
P7	SEE VENT THROUGH ROOF DETAIL ON SHEET P-501. TYPICAL ALL VTR'S.
P8	SEE FLOOR DRAIN DETAIL ON SHEET P-501. TYPICAL ALL FLOOR DRAINS.
P12	CONNECT NEW SANITARY PIPING INTO EXISTING SANITARY MAIN SERVING BUILDING LOCATED IN THIS APPROXIMATE AREA. CONTRACTOR SHALL FIELD VERIFY CONNECTION POINT PRIOR TO START OF CONSTRUCTION. CONTRACTOR SHALL SCOPE EXISTING LINES TO VERIFY PIPE SIZE, INVERT, CONDITION, AND DIRECTION OF FLOW PRIOR TO START OF CONSTRUCTION.
P20	PROVIDE AIR GAP FITTING AND CONNECTION TO SINK DRAIN FOR DISHWASHER.
P24	SEE FLOOR CLEANOUT DETAIL ON SHEET P-601. TYPICAL ALL FCO'S.

Pipe Type Legend

Mark	Color	System Name	Pipe Material
S1.19		S1 - Sanitary	19 - PVC - Schedule 40 - ASTM D1785/D2665
V1.19		V1 - Vent	19 - PVC - Schedule 40 - ASTM D1785/D2665

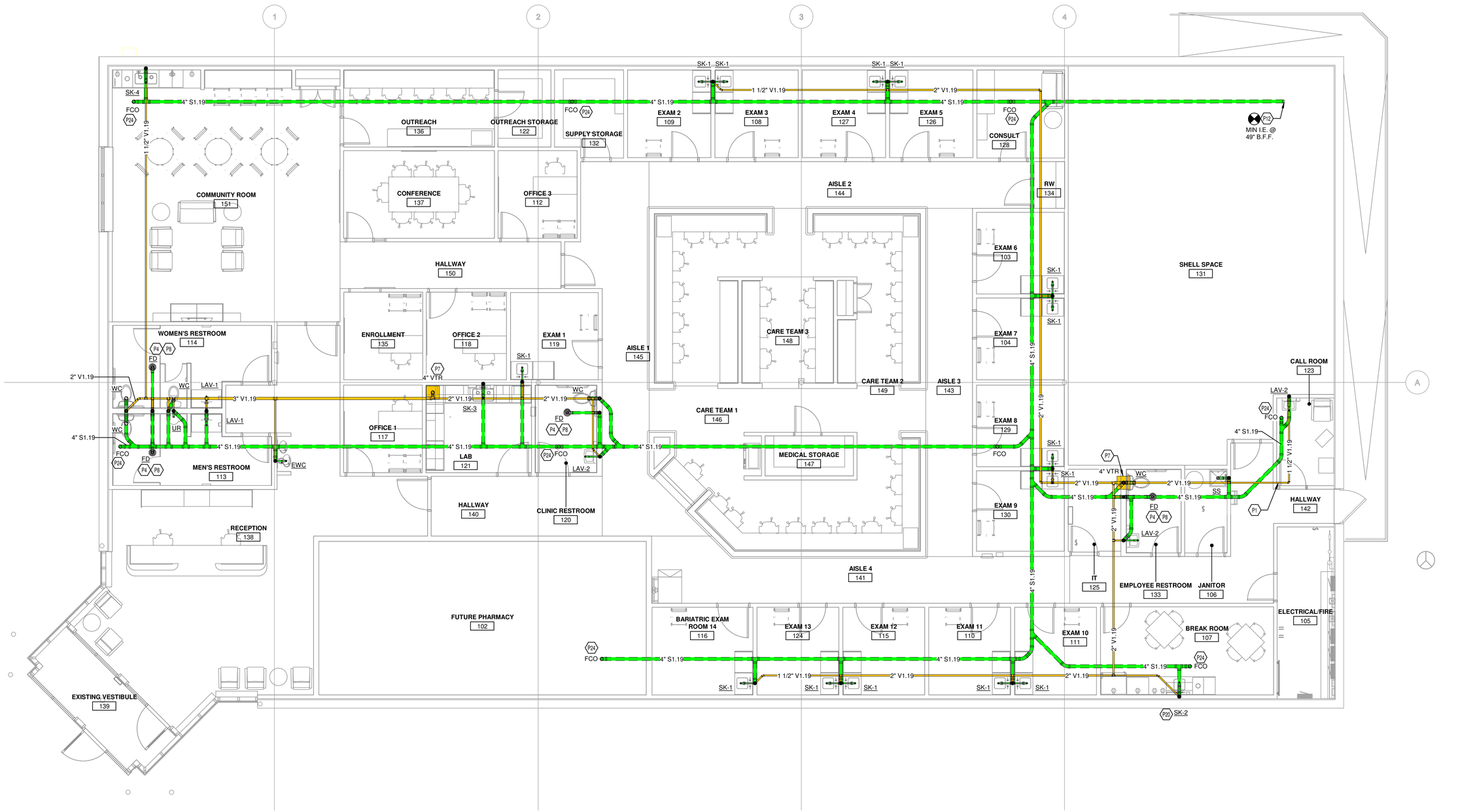

1 PLUMBING SANITARY & VENT PLAN
3/16" = 1'-0"

MECHANICAL/ELECTRICAL ENGINEERS
WWW.KLHENGRS.COM
LEXINGTON, KENTUCKY
LOUISVILLE, KENTUCKY
COLUMBUS, OHIO
NEW YORK, NEW YORK
KLH #: 25588

KLH ENGINEERS
KOHRS LONNEMANN HEIL ENGINEERS, INC.
1538 ALEXANDRIA PIKE, SUITE 11
FT. THOMAS, KENTUCKY 41075
859-442-8050 859-442-8060
859-442-8058 FAX

Project

Oak St. Health
520 PENN AVENUE,
WILKINSBURG, PA

Architect

MOODY•NOLAN
300 Spruce Street Phone: (614) 461-4664
Suite 300 Fax: (614) 280-8881
Columbus, Ohio 43215 www.moodynolan.com

Seal:

COMMONWEALTH OF PENNSYLVANIA
REGISTERED PROFESSIONAL
KRIS SCHNITGEN
ENGINEER
PE-087168-E
9/27/2023

Versions

No.	Date	Description

Sheet Title

PLUMBING SANITARY & VENT PLAN

Issue Date: 09/05/2023

Drawn: Author

Project No. 25588

Sheet No.

P-102

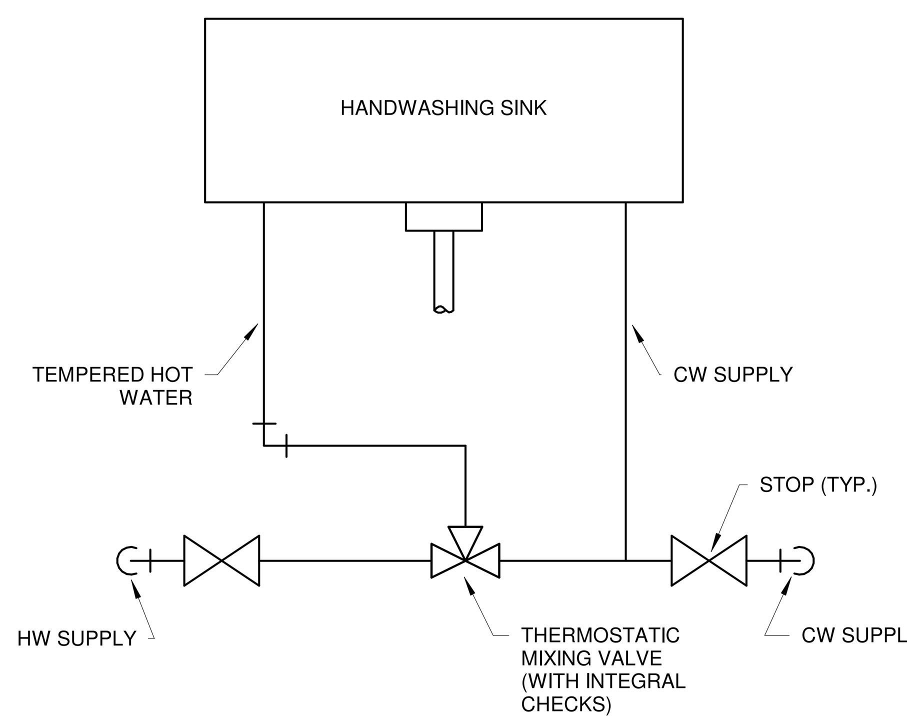

223001.00-01 - THERMOSTATIC MIXING VALVE TMV DETAIL

SCALE: NONE

GENERAL NOTES:

A. PIPING ARRANGEMENTS SHOWN ARE SCHEMATIC. ADJUST TO SUIT ACTUAL CONDITIONS. MAKE FINAL CONNECTION TO EQUIPMENT AS RECOMMENDED BY MANUFACTURER

KEYED NOTES:

1. GAS SUPPLY.
2. APPROVED GAS SHUT OFF VALVE.
3. APPROVED UNION WITHIN 6'-0" OF APPLIANCE OR EQUIPMENT SERVED.
4. MINIMUM 6" LONG SEDIMENT TRAP WITH THREADED CAP. INSTALL CAP WITH PROPER CLEARANCE TO PROVIDE SERVICABILITY.
5. TO UNIT INLET CONNECTION.

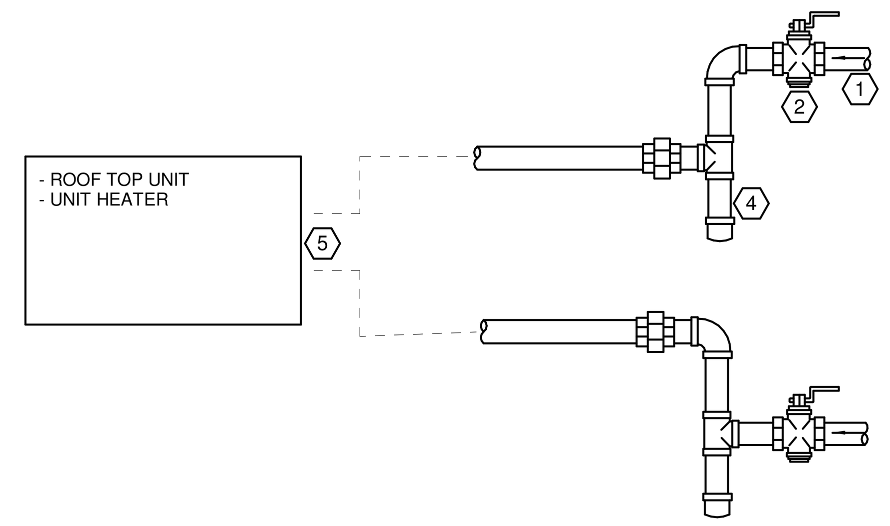

221613.00-11 - TYPICAL GAS CONNECTIONS TO EQUIPMENT

SCALE: NONE

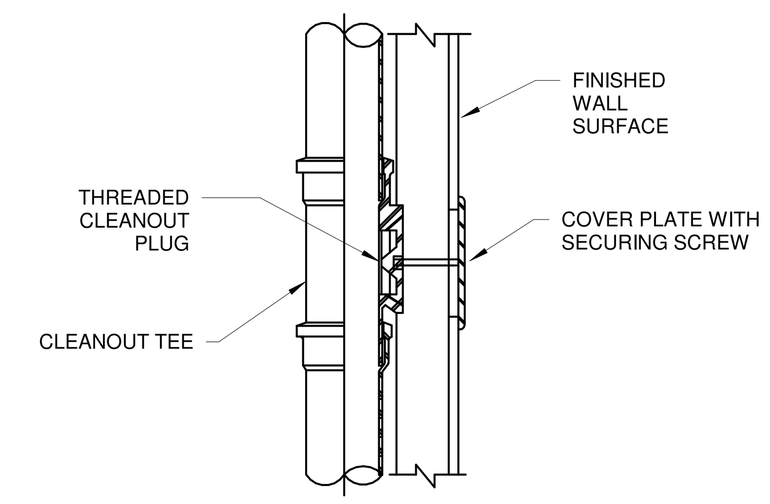

221319.00-05 - WALL CLEANOUT DETAIL

SCALE: NONE

GENERAL NOTES:

A. SLOPE FLOOR TO DRAIN TO FLOOR DRAIN.

KEYED NOTES:

1. FINISH FLOOR SLAB - SLOPE TO DRAIN.
2. WATER PROOFING MEMBRANE. FLASHING FLANGE (IF APPLICABLE).
3. STRUCTURAL SLAB
4. FLOOR DRAIN BODY.

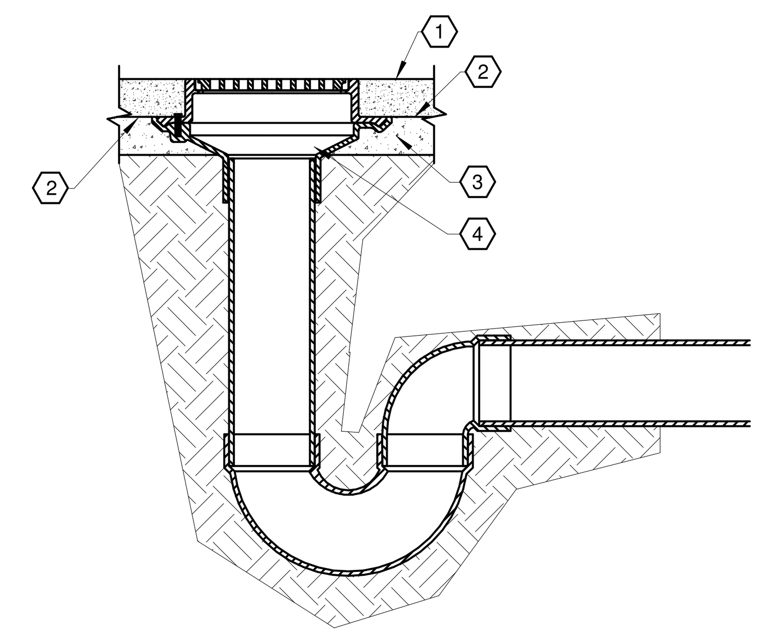

221316.00-01 - FLOOR DRAIN DETAIL

SCALE: NONE

KEYED NOTES:

1. 3" MINIMUM VENT TEMINAL TO BE A MINIMUM OF 1'-0" OR 6" ABOVE LOCAL SNOW LEVELS. CONSULT LOCAL CODES IF THEY VARY FROM THIS STANDARD.
2. PIPE SEALANT. COORDINATE SEALANT TYPE WITH ROOFING CONTRACTOR.
3. STAINLESS STEEL PIPE CLAMP.
4. VENT FLASHING. COORDINATE FLASHING MATERIAL AND INSTALLATION WITH ROOFING CONTRACTOR.
5. ROOFING SYSTEM.
6. THERMAL ENVOLOPE INSULATION.
7. ANY CHANGE IN VENT SIZE SHALL BE MADE NOT LESS THAN 1'-0" INSIDE THE THERMAL ENVELOPE.

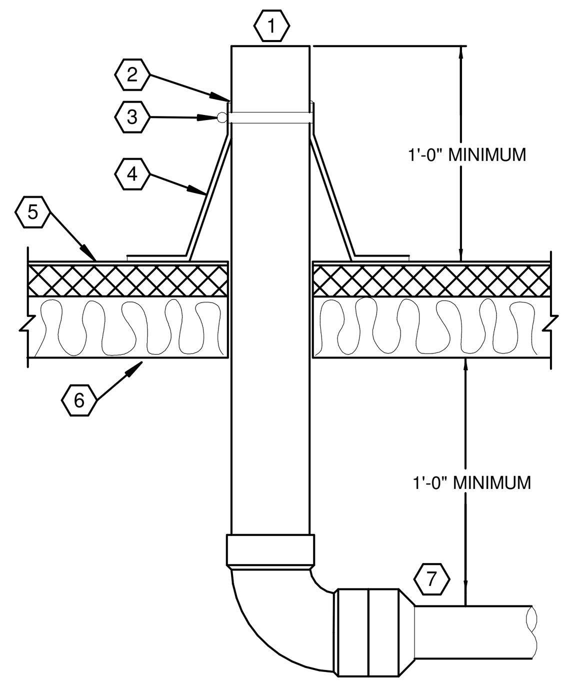

221313.00-06 - VENT THRU ROOF

SCALE: NONE

KEYED NOTES:

1. AQUASTAT WIRED TO START CIRCULATING PUMP WHEN LINE WATER TEMPERATURE DROPS 10°F BELOW DESIRED HOTWATER LOOP TEMPERATURE. AQUASTAT/THERMAL WELL SHALL HAVE ADJUSTABLE TEMPERATURE RANGE OF 50°F-160°F.
2. TEMPERATURE GAUGE AND SNUBBER. **CRITICAL TO INSTALLATION**.
3. BALL VALVE (TYPICAL).
4. WYE STRAINER
5. HOT WATER RECIRCULATION PUMP.
6. PRESSURE GAUGE AND SNUBBER (TYPICAL) **CRITICAL TO INSTALLATION**.
7. UNION (TYPICAL).
8. CHECK VALVE.
9. BALANCING VALVE.
10. RETURN LINE TO HOT WATER SUPPLY SYSTEM.

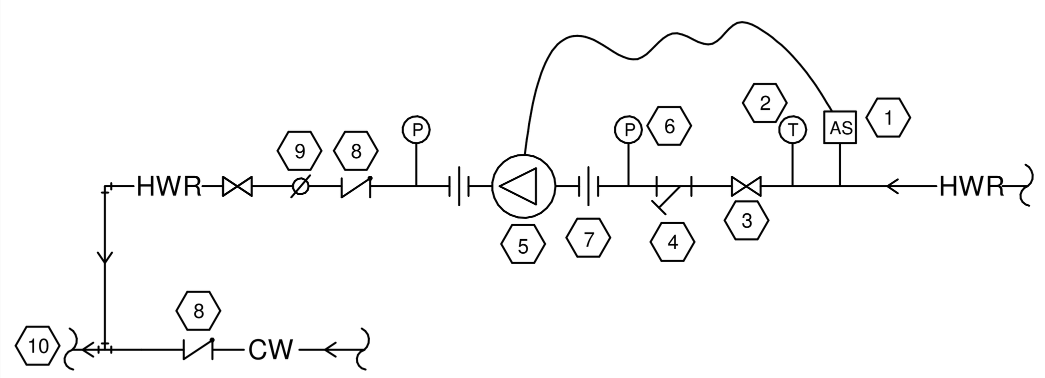

221123.00-01 - HOT WATER RECIRCULATION PUMP

SCALE: NONE

KEYED NOTES:

1. SHUT-OFF VALVE.
2. DOMESTIC COLD WATER LINE.
3. TRAP PRIMER VALVE WITH BACKFLOW PREVENTER AND VACCUM BREAK.
4. DISTRIBUTION UNIT FOR MULTIPLE FLOOR DRAINS. (OMIT DISTRIBUTION UNIT WHEN SERVING SINGLE DRAIN.)
5. MINIMUM 1/2" COPPER FLOOR DRAIN TRAP MAKE-UP WATER LINE. (TYPICAL)
6. WATER SEAL.
7. SLOPE PIPING BELOW SLAB TO FLOOR DRAIN.
8. 1/2" SUPPLY SIZE.

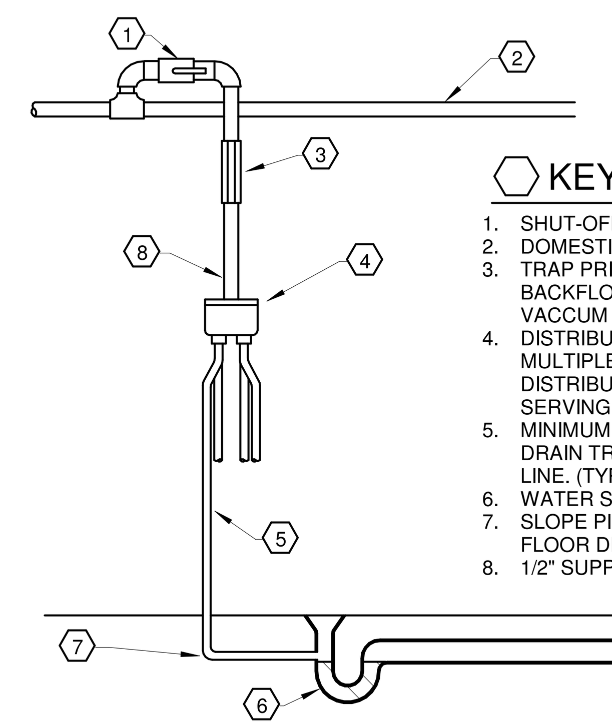

NOTE: TRAP PRIMER LINE SHALL NOT EXCEED 20 FT.

221119.00-34 - TRAP PRIMER DETAIL

SCALE: NONE

KEYED NOTES:

1. FLOOR/HUB DRAIN SUBJECT TO TRAP SEAL EVAPORATING.
2. TRAP PRIMER FITTING EQUAL TO ZURN Z1023.
3. LIQUID TRAP SEAL.
4. SLOPE SUPPLY PIPING TO DRAIN.

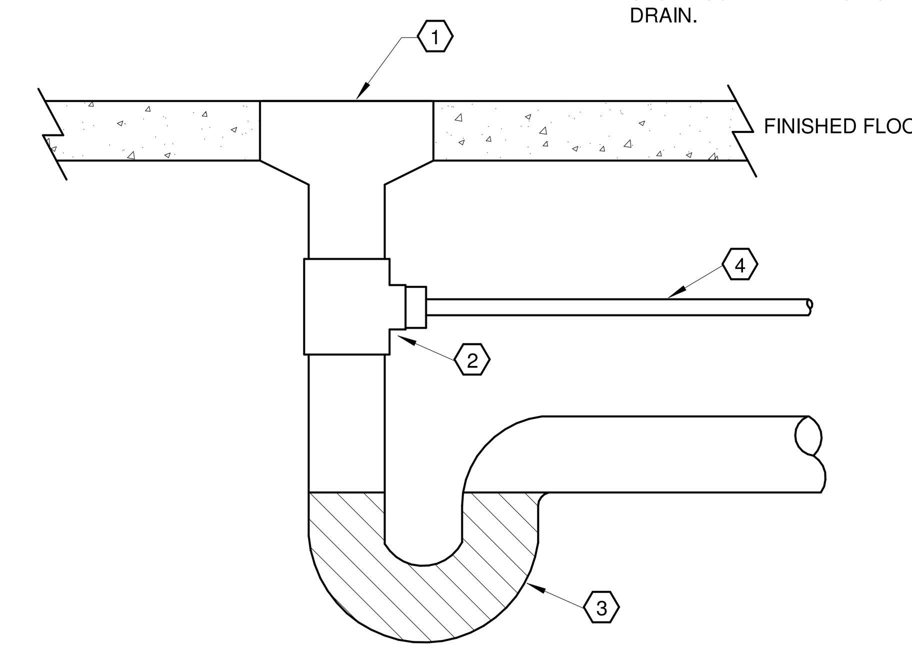

221119.00-02 - TRAP PRIMER CONNECTION DETAIL

SCALE: NONE

KEYED NOTES:

1. INCOMING WATER SERVICE UP THROUGH FINISHED FLOOR.
2. MAIN BUILDING SHUT-OFF
3. PRESSURE GAUGE AND SNUBBER(TYPICAL). **CRITICAL TO INSTALLATION.**
4. STRAINER.
5. UNION (TYPICAL)
6. WATER METER AND METER SPREAD TO CONFORM TO WATER PURVEYOR REQUIREMENTS.
7. REDUCED PRESSURE ZONE BACKFLOW PREVENTER. ASSE 1013 APPROVED (TYPICAL).
8. FUNNEL WITH AIR GAP. ROUTE PIPING TO FLOOR DRAIN.
9. PROVIDE AIR GAP.
10. FLOOR DRAIN.
11. PRESSURE REGULATING VALVE. AS REQUIRED IF UPSTREAM PRESSURE IS ABOVE 80 PSI.
12. DOMESTIC COLD WATER SUPPLY TO BUILDING.

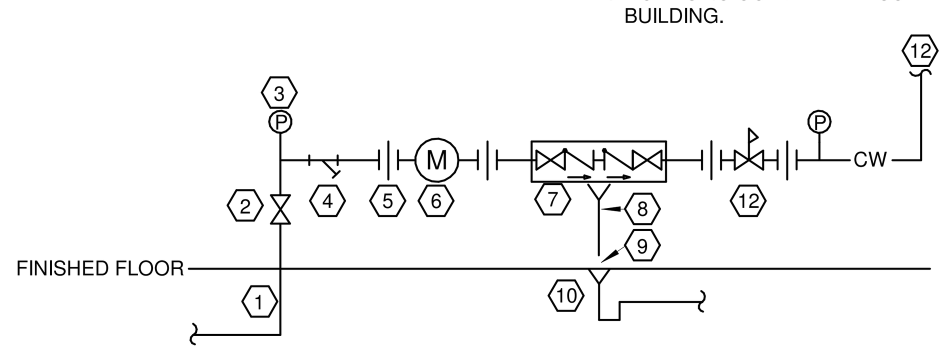

221113.00-02 - SINGLE BACKFLOW PREVENTER WITH METER DETAIL

SCALE: NONE

KEYED NOTES:

1. HANGER ROD.
2. GALVANIZED STEEL PIPE SHIELD AND 360° CALCIUM SILICATE INSULATION HANGER SUPPORT.
3. PIPE INSULATION.
4. PIPE.
5. UNISTRUT CHANNEL.
6. CLEVIS HANGER.
7. TRAPEZE PIPE HANGER.

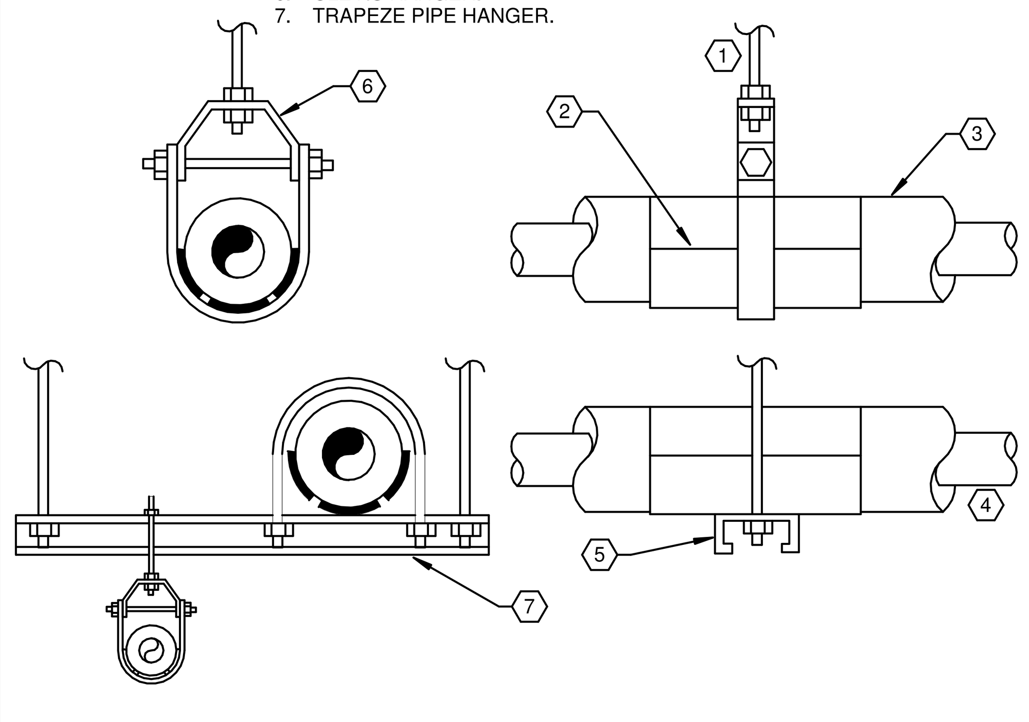

220529.00-01 - PLUMBING PIPE HANGER INSTALLATION

SCALE: NONE

KEYED NOTES:

1. PIPE.
2. PIPE INSULATION.
3. FLEXIBLE SEALANT OR FIRE RATED SEALANT FOR FIRE RATED PENETRATIONS.
4. SCHEDULE 40 STEEL PIPE SLEEVE TO BE 1" LARGER THAN THE OUTSIDE SURFACE OF PIPE INSULATION AND FLUSH TO WALL SURFACE. DO NOT SUPPORT PIPING WITH SLEEVE.
5. RISER CLAMP.
6. FINISHED FLOOR. REFER TO ARCHITECTURAL PLANS FOR FLOOR CONSTRUCTION TYPE.

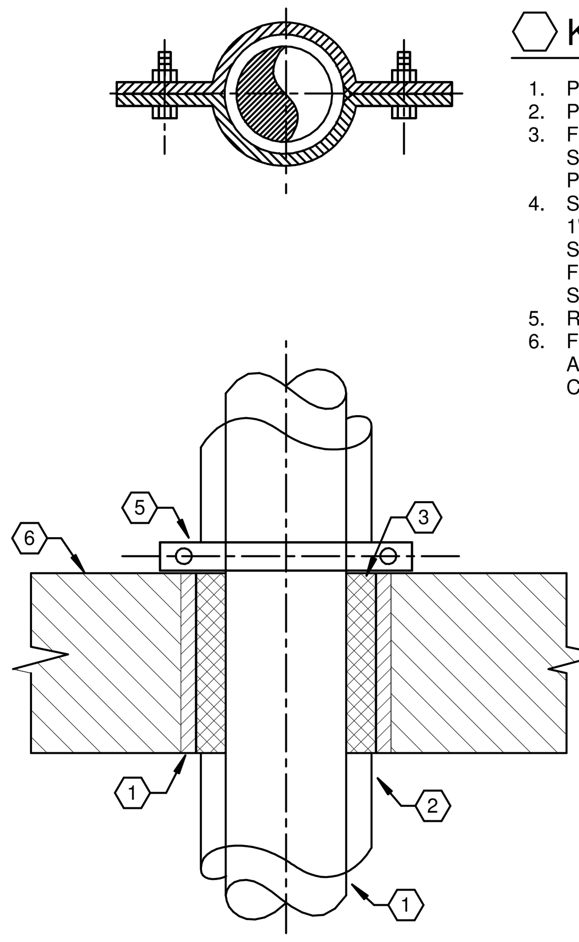

220517.00-04 - PIPE SLEEVE THROUGH EXPOSED FLOOR

SCALE: NONE

KEYED NOTES:

1. NON-COMBUSTIBLE PIPE.
2. PIPE INSULATION TO BE CONTINUOUS THROUGH WALL.
3. FLEXIBLE SEALANT OR FIRE RATED SEALANT FOR FIRE RATED PENETRATIONS.
4. SCHEDULE 40 STEEL PIPE SLEEVE TO BE 1" LARGER THAN THE OUTSIDE SURFACE OF PIPE INSULATION AND FLUSH TO WALL SURFACE. DO NOT SUPPORT PIPING WITH SLEEVE.
5. FINISHED WALL SURFACE. REFER TO ARCHITECTURAL PLANS FOR WALL CONSTRUCTION TYPE.

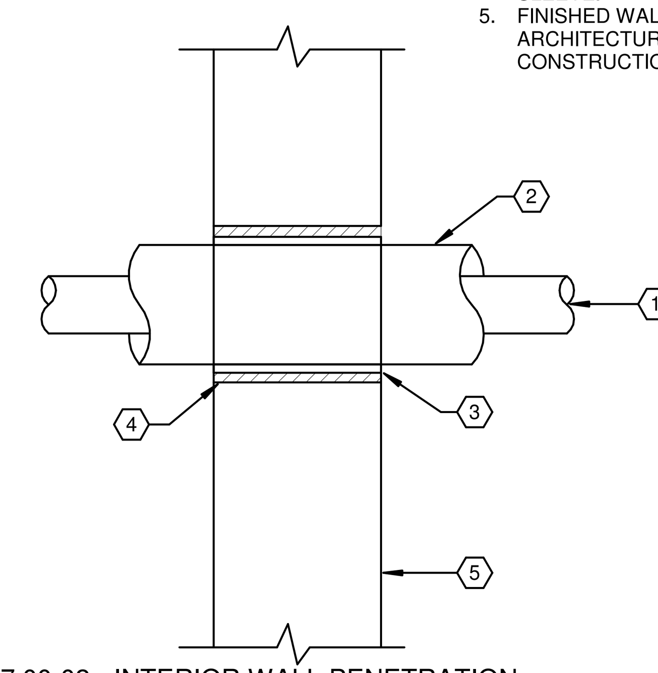

220517.00-02 - INTERIOR WALL PENETRATION

SCALE: NONE

KLH ENGINEERS
MECHANICAL/ELECTRICAL ENGINEERS
WWW.KLHENGRS.COM
KOHRS LONNEMANN HEIL ENGINEERS, INC.
1538 ALEXANDRIA PIKE, SUITE 11
FT. THOMAS, KENTUCKY 41075
800-354-9783 859-442-8050
859-442-8058 FAX
LEXINGTON, KENTUCKY
LOUISVILLE, KENTUCKY
COLUMBUS, OHIO
NEW YORK, NEW YORK
KLH #: 25588

Project

Oak St. Health

520 PENN AVENUE,
WILKINSBURG, PA

Architect

MOODY•NOLAN
300 Spruce Street
Suite 300
Columbus, Ohio 43215
Phone: (614) 461-4664
Fax: (614) 280-8881
www.moodynolan.com

Seal:

COMMONWEALTH OF PENNSYLVANIA
REGISTERED PROFESSIONAL ENGINEER
KRIS SCHNITGEN
PE-087166
9/27/2023

Versions

No.	Date	Description

Sheet Title

PLUMBING - DETAILS

Issue Date: 09/05/2023

Drawn: Author

Project No. 25588

Sheet No.

P-501

PLUMBING GAS LOAD SCHEDULE

Total Equivalent Length of Pipe(Feet):	185	Pressure Drop (inches W.C):	0.5	Delivery Pressure After Meter & PRV (inches W.C.):	7.0	Gas Type	[NATURAL GAS]

MARK	HVACTYPE	DESCRIPTION	STATUS	GAS HTG IN (CFH)	MIN GAS PRESSURE (IN WC)	MAX GAS PRESSURE (IN WC)
GFUH-1	23 55 33.00	GAS FIRED UNIT HEATER	NEW	60	4.5	14
RTU-1	23 74 33.00	PACKAGED ROOFTOP UNIT, GAS HEAT	NEW	200	4.5	14
RTU-2	23 74 33.00	PACKAGED ROOFTOP UNIT, GAS HEAT	NEW	81	4.5	14
RTU-3	23 74 33.00	PACKAGED ROOFTOP UNIT, GAS HEAT	NEW	200	4.5	14
RTU-4	23 74 33.00	PACKAGED ROOFTOP UNIT, GAS HEAT	NEW	81	4.5	14
		TOTAL GAS LOAD:		622		

PLUMBING ELECTRICAL COORDINATION SCHEDULE

ABBREVIATIONS

DC	LOCAL DISCONNECT
MC	MOTOR CONTROL (POWER)
SD	DUCT SMOKE DETECTOR
CN	CONTROLS
TS	TOGGLE SWITCH
C/B	H.A.C.R. CIRCUIT BREAKER AT SOURCE PANELBOARD
FUSE	FUSE AT LOCAL DISCONNECT (VERIFY FIELD RATING)
FLA	OPERATING FULL LOAD AMPS
MCA	MINIMUM CIRCUIT AMPACITY
CP	CORD AND PLUG CONNECTION
[BLANK]	HARD WIRED (WHEN INDICATED FOR DC TYPE)

CONTRACTOR TYPE

EC	ELECTRICAL CONTRACTOR
EX	EXISTING
FC	FIRE PROTECTION CONTRACTOR
GC	GENERAL CONTRACTOR
HC	HVAC CONTRACTOR
MFR	MANUFACTURER
PC	PLUMBING CONTRACTOR
OR	OWNER OR OTHERS

MOTOR CONTROL TYPE

CS	COMBINATION STARTER
MCC	MOTOR CONTROL STARTER
MG	MAGNETIC STARTER OR CONTACT
MS	MANUAL STARTER
VFD	VARIABLE FREQUENCY DRIVE
MSR	MANUAL STARTER W/ CONTROL RELAY
OV	OVERCURRENT PROTECTION

CONTROL TYPE

TC	TIMECLOCK
CPT	CONTROL POWER TRANSFORMER
BAS	BUILDING AUTOMATION SYSTEM
LOW	LOW VOLTAGE CONTROLS
LINE	LINE VOLTAGE CONTROLS
RLINE	REVERSE ACTING LINE VOLTAGE
MAN	THERMOSTAT
FA	MANUAL
CO	FIRE ALARM
INT	CARBON MONOXIDE SENSOR
ASD	INTEGRAL TO EQUIPMENT
DSD	AREA SMOKE DETECTOR...

SHORT CIRCUIT RATING

WHERE SHORT CIRCUIT RATING CODE REQUIRED VALUE INDICATES "YES" APPLICABLE EQUIPMENT'S SHORT CIRCUIT RATING SHALL EXCEED THE AVAILABLE FAULT CURRENT VALUE INDICATED.

CONNECTION MARK	DESCRIPTION	VOLTAGE	PHASE	HP	WATTS	HTG KW	FLA (A)	MCA (A)	OCP (A)	FED FROM	DC TYPE	DC FURN	DC INST	DC WIRE	MC TYPE	MC FURN	MC INST	MC WIRE	CN TYPE	CN FURN	CN INST	CN WIRE	SHORT CIRCUIT RATING CODE REQUIRED?	AVAILABLE FAULT CURRENT
EWC	WATER COOLER	120 V	1				5				CP	EC	EC	EC	MG				MAN	MFR	MFR	MFR	No	514
WH	TANK TYPE ELECTRIC WATER HEATER	240 V	1			5						EC	EC	EC	--	--	--	--	INT	MFR	MFR	MFR	No	6006
CP	DOMESTIC HOT WATER CIRCULATION PUMP	120 V	1	0.04								EC	EC	EC	MG	MFR	MFR	MFR	LINE	PC	PC	EC	No	1728

PLUMBING WATER HEATER SCHEDULE

Equipment shall be braced and labeled by the equipment manufacturer to withstand the minimum scheduled available fault current value for listed equipment.

MARK	DESCRIPTION	MANUFACTURER	MODEL	EFFICIENCY	EWT (DEG F)	LWT (DEG F)	STORAGE (GAL)	WEIGHT	ACCESS	ELECTRIC CONNECTION SUMMARY	AVAILABLE FAULT CURRENT
WH	TANK TYPE ELECTRIC WATER HEATER	AO SMITH	DEL-30	99	40	140	30	365		WH - 240V/1PH, 5 KW HTG	6006

PLUMBING PUMP SCHEDULE

Equipment shall be braced and labeled by the equipment manufacturer to withstand the minimum scheduled available fault current value for listed equipment.

MARK	DESCRIPTION	MANUFACTURER	MODEL	WEIGHT (lbs)	FLOW (gpm)	HEAD (ft)	ACCESSORIES	ELECTRIC CONNECTION SUMMARY	AVAILABLE FAULT CURRENT
CP	DOMESTIC HOT WATER CIRCULATION PUMP	TACO	008-IFC	8	1	12		CP - 120V/1PH, 0.04 HP	1728

PLUMBING ELECTRIC WATER COOLER SCHEDULE

Equipment shall be braced and labeled by the equipment manufacturer to withstand the minimum scheduled available fault current value for listed equipment.

MARK	DESCRIPTION	MANUFACTURER	MODEL	ACCESSORIES	INT TRAP	TRAP SIZE (IN)	ELECTRIC CONNECTION SUMMARY	AVAILABLE FAULT CURRENT
EWC	WATER COOLER	ELKAY	LZSTL8WSSP	WITH BOTTLE FILLER			EWC - 120V/1PH, 5A FLA	

PLUMBING FIXTURE SCHEDULE

MARK	DESCRIPTION	MANUFACTURER	MODEL	VALVE/FAUCET MFGR	VALVE/FAUCET MODEL	INT TRAP	TRAP SIZE (in)	ACCESSORIES
LAV-1	LAVATORY	MANSFIELD	#216NS	MOEN	8430	NO	1.5	PROVIDE TMV. SINK BY MILLWORKER, FAUCET BY PLUMBER.
LAV-2	LAVATORY	MANSFIELD	#2018HB	MOEN	8430	NO	1.5	PROVIDE TMV.
SK-1	SINK	ELKAY	ELUHAD141455PD	CHICAGO	895-E72-317ABCP	NO	1.5	PROVIDE TMV. SINK BY MILLWORKER, FAUCET BY PLUMBER.
SK-2	SINK	ELKAY	LRAD172065PD	PEERLESS	P188103LF-SD	NO	1.5	PROVIDE TMV. SINK & FAUCET BY PLUMBER.
SK-3	SINK	ELKAY	LRAD33216	MOEN	7425 LESS SPRAY	NO	1.5	PROVIDE TMV. SINK & FAUCET BY PLUMBER.
SK-4	SINK	ELKAY	ELUHD321650	MOEN	7425 LESS SPRAY	NO	1.5	PROVIDE TMV. SINK BY MILLWORKER, FAUCET BY PLUMBER.
SS	MOP SINK	MUSTEE	63M	CHICAGO	897RCF	NO	3	VACUUM BREAKERS AT 76" AFF.
UR	URINAL	MANSFIELD	#410	SLOAN	G2 8186-1.0	YES	2	PROVIDE WALL CARRIER.
WB	ICE MAKER BOX	OATEY	39140	--	--	NO	2	
WC	FLUSH VALVE WATER CLOSET	MANSFIELD	#1319	--	--	YES	4	BEMIS #2155CT SEAT.

PLUMBING MISCELLANEOUS EQUIPMENT SCHEDULE

Equipment shall be braced and labeled by the equipment manufacturer to withstand the minimum scheduled available fault current value for listed equipment.

MARK	DESCRIPTION	MANUFACTURER	MODEL	LWT (DEG F)	STORAGE (GAL)	ACCESSORIES	ELECTRIC CONNECTION SUMMARY	AVAILABLE FAULT CURRENT
ET	DOMESTIC WATER EXPANSION TANK	AMTROL	ST-12		5			
TMV	THERMOSTATIC MIXING VALVE	WATTS	LFUSG-B	105		SET TO 105F.		
TP	TRAP PRIMER	POWERS	P1 SERIES			PROVIDE EITHER P1-500 OR P2-500 AS NEEDED FOR NUMBER OF FLOOR DRAINS.		

PLUMBING DRAIN SCHEDULE

MARK	DESCRIPTION	MANUFACTURER	MODEL	TRAP PRIMER	TRAP SIZE (in)	ACCESSORIES/REMARKS
FD	FLOOR DRAIN	ZURN	Z415B	YES	3	

GENERAL NOTES:

1. COMPRESSION FITTINGS AND PLASTIC FITTINGS AND PIPING NOT ALLOWED FOR WATER CONNECTIONS TO APPLIANCES

KEYED NOTES:

1. ASSE 1024 BACKFLOW.
2. SHUTOFF VALVE
3. SOLDERED M COPPER PIPING.
4. TO APPLIANCE.
5. FROM COLD WATER PIPING.

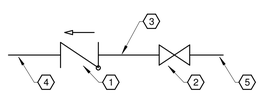

CONNECTION TO COFFEE AND REFRIGERATOR DETAIL

SCALE: NONE

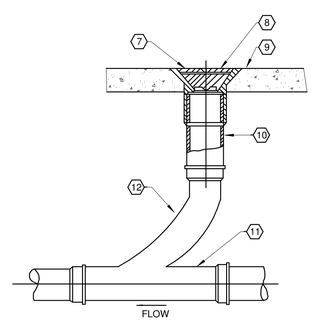

INTERIOR FLOOR CLEANOUT

221313.00-01 - FLOOR CLEANOUTS

SCALE: NONE

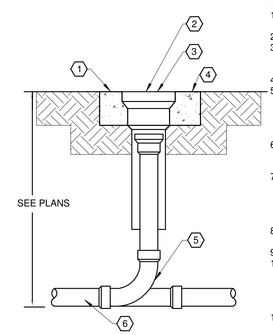

EXTERIOR CLEANOUT

KEYED NOTES:

1. 6" THICK BY 18" SQUARE CONCRETE PAD.
2. "CO" TO BE CAST IN COVER.
3. CAST IRON CLEANOUT WITH COVER FOR DUTY REQUIRED.
4. GRADE FOR PAVING.
5. CAST IRON LONG SWEEP 1/4 BEND OR CAST IRON COMB," Y 1/8" "& BEND. (USE REDUCING TYPE WHERE REQUIRED).
6. BUILDING DRAIN OR SEWER MATERIAL AND SIZE SPECIFIED.
7. CLEANOUT RATED FOR EXPECTED WHEEL LOADING REFER TO SPECIFICATIONS AND PLANS FOR TYPE AND LOCATIONS.
8. TOP FLUSH WITH FINISHED FLOOR.
9. FINISHED FLOOR LEVEL.
10. FULL PIPE SIZE EXTENSION UP TO 6" LENGTH AS REQUIRED, PROVIDE SAME SIZE AS LINE SERVED UP TO 6".
11. COMBINATION WYE AND 1/8" BEND OR AS CODE REQUIRED.
12. LONG SWEEP 1/4" BEND.

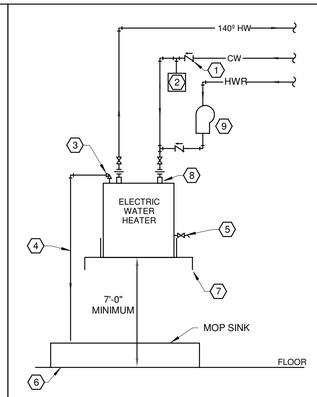

KEYED NOTES:

1. CHECK VALVE.
2. AMTROL ST-5 OR EQUIVALENT.
3. ASME APPROVED TEMPERATURE AND PRESSURE RELIEF VALVE, 210°F, 60 PSI.
4. REFIEF PIPE, FULL SIZE OF OPENING.
5. DRAIN VALVE.
6. MOP SINK.
7. MOUNT ON BRACKETS OR SUSPEND FROM JOISTS ABOVE.
8. HEAT TRAP NIPPLE.
9. RECICULATING PUMP. REFER TO REOIRCULATING PUMP DETAIL FOR FURTHER PIPING SCHEMATICS.

223300.00-01 - SHELF - MOUNTED ELECTRIC WATER HEATER

SCALE: NONE

MECHANICAL/ELECTRICAL ENGINEERS
WWW.KLHENGRS.COM
LEXINGTON, KENTUCKY
LOUISVILLE, KENTUCKY
CINCINNATI, OHIO
NEW YORK, NEW YORK
KLH #: 25588

KLH ENGINEERS
KOHRS LONNEMANN HEIL ENGINEERS, INC.
1538 ALEXANDRIA PIKE, SUITE 11
FT. THOMAS, KENTUCKY 41075
PHONE: 859-442-8950
859-442-8058 FAX

Project

Oak St. Health

520 PENN AVENUE,
WILKINSBURG, PA

Architect

MOODY•NOLAN

300 Spruce Street Phone: (614) 461-4664
Suite 300 Fax: (614) 280-8881
Columbus, Ohio 43215 www.moodynolan.com

Seal:

COMMONWEALTH OF PENNSYLVANIA
REGISTERED PROFESSIONAL
KRIS SCHNITGEN
ENGINEER
PE-087168-E
9/27/2023

Versions

No.	Date	Description

Sheet Title

PLUMBING - SCHEDULES

Issue Date: 09/05/2023

Drawn: Author

Project No. 25588

Sheet No.

P-601

Pipe Type Legend

Mark	Color	System Name	Pipe Material
C1.6	(cyan)	C1 - Domestic Cold Water	6 - Copper - Type L - ASTM B88
G1.26	(yellow)	G1 - Natural Gas	26 - Steel - Schedule 40 Metallic - ASTM A53
H1.6	(red)	H1 - Domestic Hot Water	6 - Copper - Type L - ASTM B88
HR1.6	(magenta)	HR1 - Hot Water Return	6 - Copper - Type L - ASTM B88

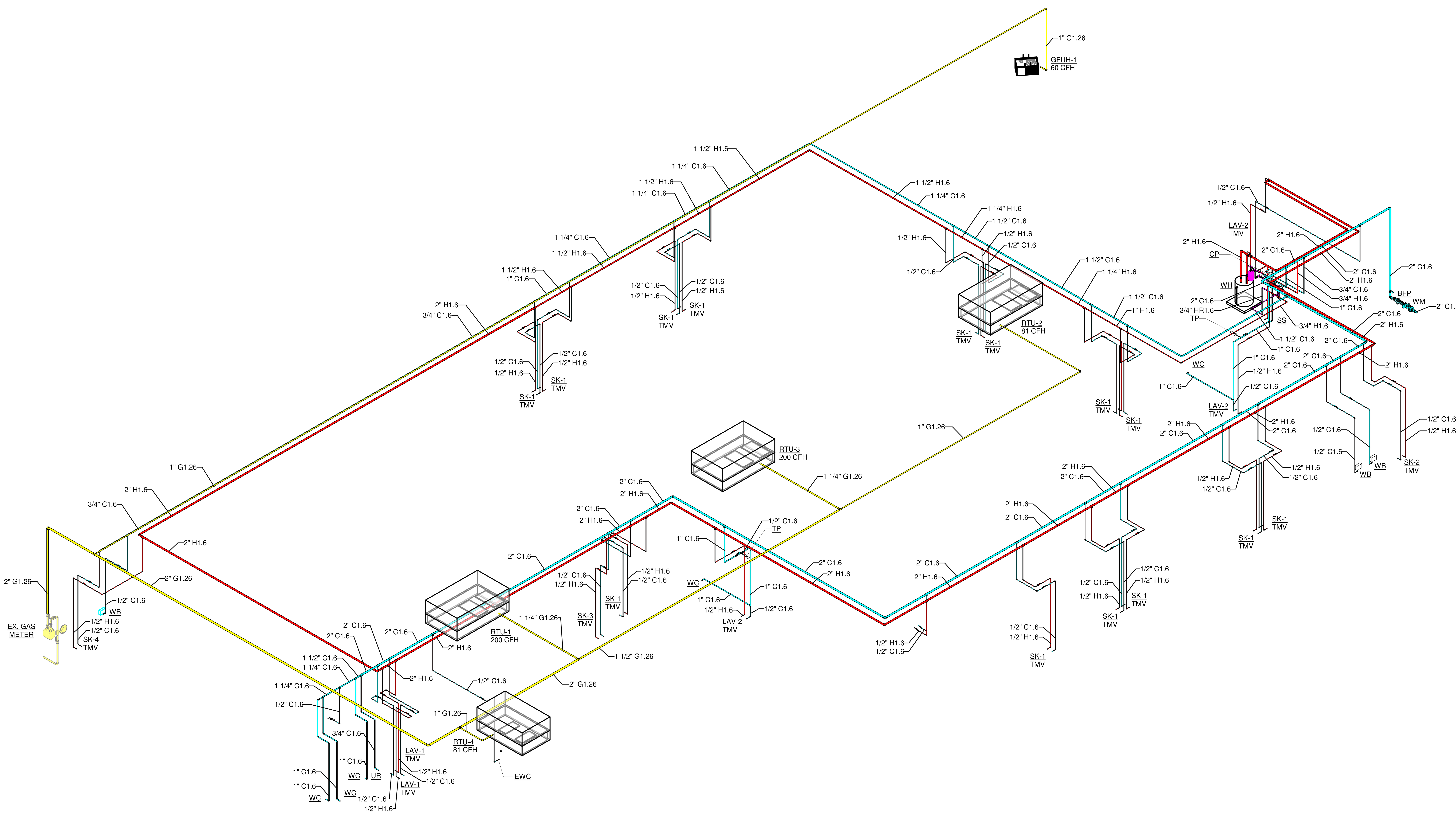

1 WATER & GAS ISOMETRIC

MECHANICAL/ELECTRICAL ENGINEERS
WWW.KLHENGRS.COM
LEXINGTON, KENTUCKY
LOUISVILLE, KENTUCKY
COLUMBUS, OHIO
NEW YORK, NEW YORK
KLH #: 25588
KLH ENGINEERS
KOHRS LONNEMANN HEIL ENGINEERS, INC.
1538 ALEXANDRIA PIKE, SUITE 11
FT. THOMAS, KENTUCKY 41075
800-354-9783 859-442-8050
859-442-8058 FAX

Project
Oak St. Health
520 PENN AVENUE,
WILKINSBURG, PA

Architect

MOODY•NOLAN
300 Spruce Street
Suite 300
Columbus, Ohio 43215
Phone: (614) 461-4664
Fax: (614) 280-8881
www.moodynolan.com

Seal:
COMMONWEALTH OF PENNSYLVANIA
REGISTERED PROFESSIONAL
KRIS SCHNITGEN
ENGINEER
PE-087168
9/27/2023

Versions

No.	Date	Description

Sheet Title
WATER & GAS ISOMETRIC

Issue Date: 09/05/2023
Drawn: JLI
Project No. 25588
Sheet No.
P-901

PER ALLEGHENY COUNTY HEALTH DEPARTMENT PLUMBING CODE SECTION AC-710.4, SANITARY DRAINAGE SYSTEMS INSTALLED UNDERGROUND OR BELOW A BASEMENT OR CELLAR FLOOR SHALL BE FOUR (4) INCHES IN DIAMETER.

Pipe Type Legend

Mark	Color	System Name	Pipe Material
S1.19	(green)	S1 - Sanitary	19 - PVC - Schedule 40 - ASTM D1785/D2665
V1.19	(yellow)	V1 - Vent	19 - PVC - Schedule 40 - ASTM D1785/D2665

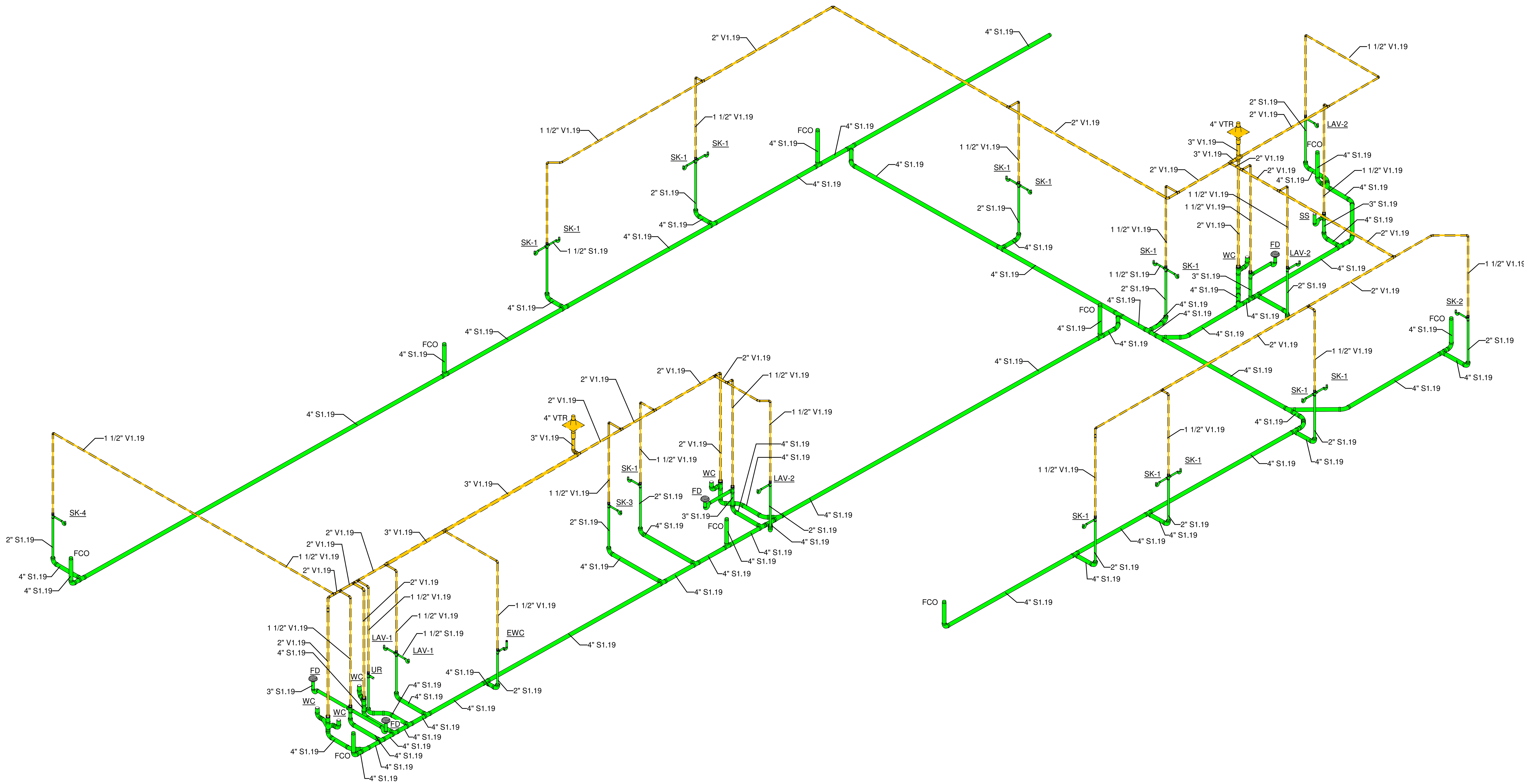

1 SANITARY & VENT ISOMETRIC

KLH ENGINEERS
KOHRS LONNEMANN HEIL ENGINEERS, INC.
1538 ALEXANDRIA PIKE, SUITE 11
FT. THOMAS, KENTUCKY 41075
800-354-9783 859-442-8050
859-442-8058 FAX

MECHANICAL/ELECTRICAL ENGINEERS

WWW.KLHENGRS.COM

LEXINGTON, KENTUCKY
LOUISVILLE, KENTUCKY
COLUMBUS, OHIO
NEW YORK, NEW YORK
KLH #: 25588

Project

Oak St. Health

520 PENN AVENUE,
WILKINSBURG, PA

Architect

MOODY•NOLAN
300 Spruce Street
Suite 300
Columbus, Ohio 43215
Phone: (614) 461-4664
Fax: (614) 280-8881
www.moodynolan.com

Seal:

COMMONWEALTH OF PENNSYLVANIA
REGISTERED PROFESSIONAL
KRIS SCHNITGEN
ENGINEER
PE-087168
9/27/2023

Versions

No.	Date	Description

Sheet Title

SANITARY & VENT ISOMETRIC

Issue Date: 09/05/2023

Drawn: JLI

Project No. 25588

Sheet No.

P-902