Site Development Plans

for

Southbridge Crossings East, 5th Addition

Shakopee, Minnesota

Presented by:

Shakopee Crossings Limited Partnership

CONSULTANT CONTACT LIST:

DEVELOPER/OWNER
SHAKOPEE CROSSINGS LIMITED PARTNERSHIP
8170 CARRIAGE COURT NORTH, SUITE 210
SHAKOPEE, MN 55379
TEL 952-465-3939
CONTACT: STEVEN D. SOLTAU

CIVIL ENGINEER
SAMBATEK
12800 WHITEWATER DRIVE, SUITE 300
MINNETONKA, MN 55343
TEL 763-476-6010
FAX 763-476-8532
CONTACT: BRADY BUSSELMAN

ARCHITECT
ARCHITECTURAL CONSORTIUM
901 N. THIRD STREET, SUITE 220
MINNEAPOLIS, MN 55401
TEL 612-436-4030
CONTACT: KATHY ANDERSON

SURVEYOR
SAMBATEK
12800 WHITEWATER DRIVE, SUITE 300
MINNETONKA, MN 55343
TEL 763-476-6010
FAX 763-476-8532
CONTACT: RICK BLOM

GEOTECHNICAL
BRAUN INTERTEC
11001 HAMPSHIRE AVE SOUTH
MINNEAPOLIS, MN 55438
TEL 952-995-2000
CONTACT: RAY HUBER

LANDSCAPE ARCHITECT
SAMBATEK
12800 WHITEWATER DRIVE, SUITE 300
MINNETONKA, MN 55343
TEL 763-476-6010
FAX 763-476-8532
CONTACT: JOSH MCKINNEY

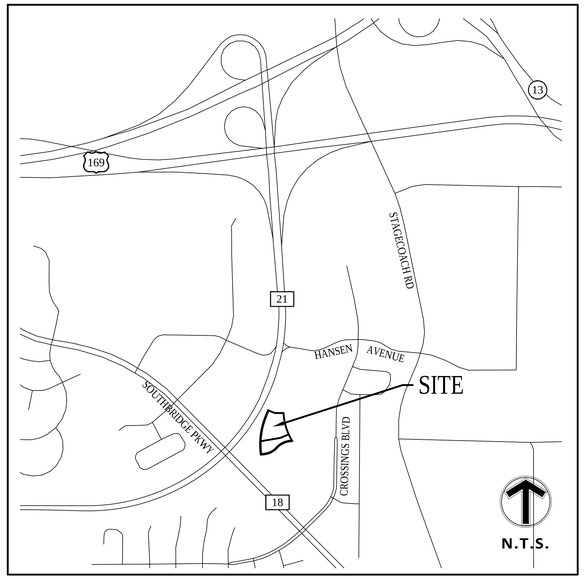

VICINITY MAP
NO SCALE

SHEET INDEX

SHEET	DESCRIPTION
C1.01	TITLE SHEET
C2.01	EXISTING CONDITIONS
C3.01	OVERALL SITE PLAN
C3.02	SITE PLAN
C4.01	GRADING PLAN
C4.02	GRADING NOTES
C5.01	PHASE I EROSION CONTROL PLAN
C5.02	PHASE II EROSION CONTROL PLAN
C5.03	EROSION CONTROL NOTES & DETAILS
C5.04	SWPPP NARRATIVE
C5.05	SWPPP NARRATIVE
C6.01	UTILITY PLAN
C9.01	DETAILS
C9.02	DETAILS
C9.03	DETAILS
C9.04	DETAILS
L1.01	LANDSCAPE PLAN
L2.01	LANDSCAPE DETAILS

GOVERNING SPECIFICATIONS

CITY OF SHAKOPEE GENERAL SPECIFICATIONS AND STANDARD DETAIL PLATES FOR STREET AND UTILITY CONSTRUCTION (MAY 2010) & SHAKOPEE PUBLIC UTILITY COMMISSION WATER POLICY

CITY ENGINEER'S ASSOCIATION OF MINNESOTA STANDARD SPECIFICATIONS (2013)

MNDOT STANDARD SPECIFICATIONS FOR CONSTRUCTION (2016 EDITION)

Sambatek
www.sambatek.com
12800 Whitewater Drive, Suite 300
Minnetonka, MN 55343
763.476.6010 telephone
763.476.8532 facsimile
Engineering | Surveying | Planning | Environmental

Client
SHAKOPEE CROSSINGS LIMITED PARTNERSHIP
8170 CARRIAGE COURT NORTH
SUITE 210
SHAKOPEE, MN 55379

Project
SOUTHBRIDGE CROSSINGS EAST 5TH ADDITION

Location
SHAKOPEE, MN

Certification

I hereby certify that this plan, specification or report was prepared by me or under my direct supervision and that I am a duly licensed professional ENGINEER under the laws of the state of Minnesota.

George D. Abernathy
Registration No. 43505 Date: 10/19/2018

If applicable, contact us for a wet signed copy of this plan which is available upon request at Sambatek's, Minnetonka, MN office.

Summary
Designed: GDA Drawn: JMW
Approved: BDB Book / Page:
Phase: PERMIT Initial Issued: 10/19/2018

Revision History

No.	Date	By	Submittal / Revision
A	10/19/18	JMW	Building Revisions

Sheet Title
TITLE SHEET

Sheet No. Revision
C1.01 A

Project No. 20787

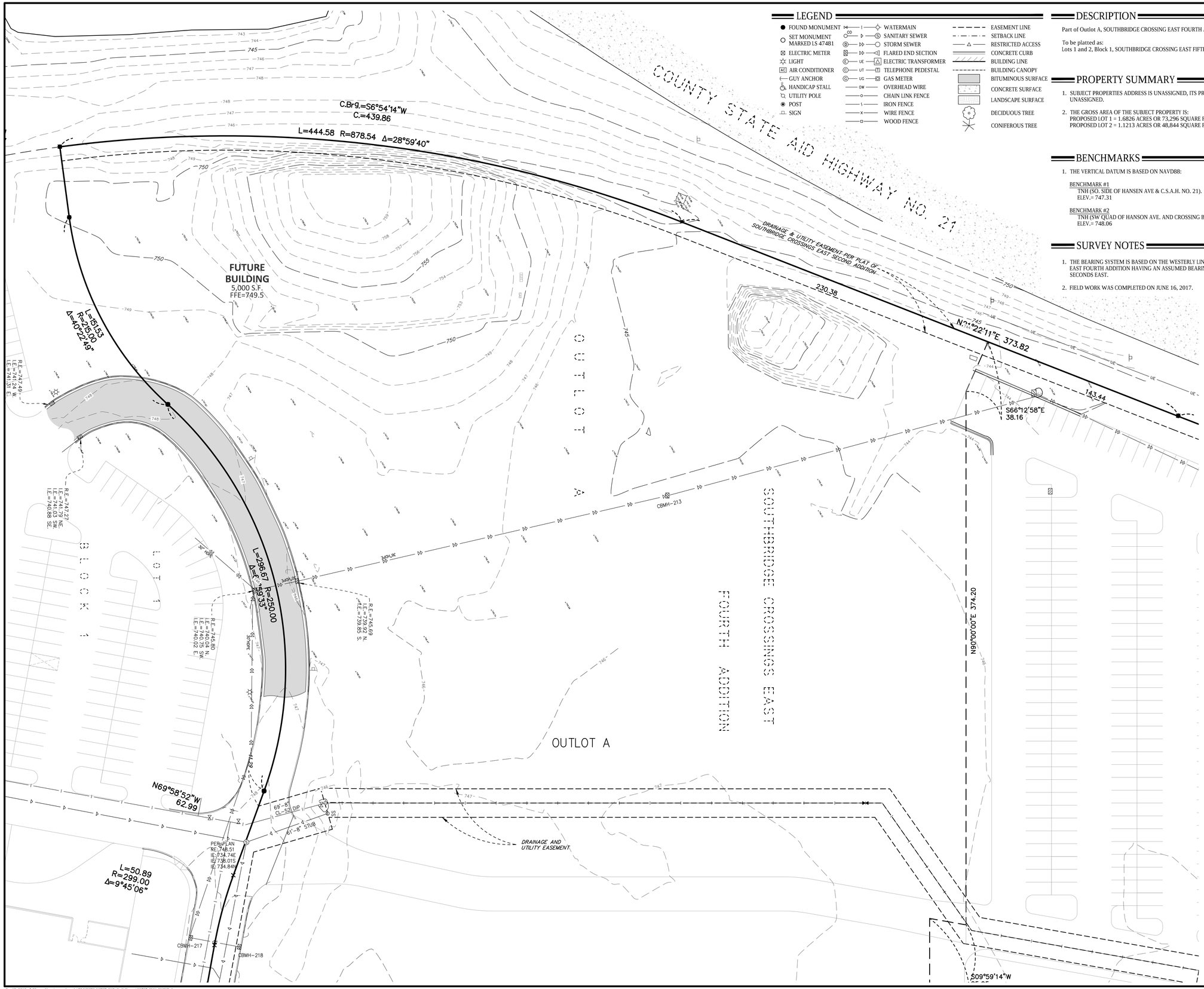

DESCRIPTION

Part of Outlot A, SOUTHBRIDGE CROSSING EAST FOURTH ADDITION. Scott County, Minnesota.

To be platted as:
Lots 1 and 2, Block 1, SOUTHBRIDGE CROSSING EAST FIFTH ADDITION. Scott County, Minnesota.

PROPERTY SUMMARY

1. SUBJECT PROPERTIES ADDRESS IS UNASSIGNED, ITS PROPERTY IDENTIFICATION NUMBER IS UNASSIGNED.
2. THE GROSS AREA OF THE SUBJECT PROPERTY IS:
   PROPOSED LOT 1 = 1.6826 ACRES OR 73,296 SQUARE FEET.
   PROPOSED LOT 2 = 1.1213 ACRES OR 48,844 SQUARE FEET.

BENCHMARKS

1. THE VERTICAL DATUM IS BASED ON NAVD88:

BENCHMARK #1
TNH (SO. SIDE OF HANSEN AVE & C.S.A.H. NO. 21).
ELEV.= 747.31

BENCHMARK #2
TNH (SW QUAD OF HANSON AVE. AND CROSSING BLVD).
ELEV.= 748.06

SURVEY NOTES

1. THE BEARING SYSTEM IS BASED ON THE WESTERLY LINE OF LOT 1, BLOCK 1, SOUTHBRIDGE CROSSINGS EAST FOURTH ADDITION HAVING AN ASSUMED BEARING OF NORTH 21 DEGREES 22 MINUTES 11 SECONDS EAST.
2. FIELD WORK WAS COMPLETED ON JUNE 16, 2017.

Sambatek
www.sambatek.com
12800 Whitewater Drive, Suite 300
Minnetonka, MN 55343
763.476.6010 telephone
763.476.8532 facsimile
Engineering | Surveying | Planning | Environmental

Client
SHAKOPEE CROSSINGS LIMITED PARTNERSHIP
8170 CARRIAGE COURT NORTH
SUITE 210
SHAKOPEE, MN 55379

Project
SOUTHBRIDGE CROSSINGS EAST 5TH ADDITION

Location
SHAKOPEE, MN

Certification

Summary
Designed: GDA Drawn: JMW
Approved: BDB Book / Page:
Phase: PERMIT Initial Issued: 10/19/2018

Revision History

No.	Date	By	Submittal / Revision
A	10/19/18	JMW	Building Revisions

Sheet Title
EXISTING CONDITIONS

Sheet No. Revision
C2.01 A

Project No. 20787

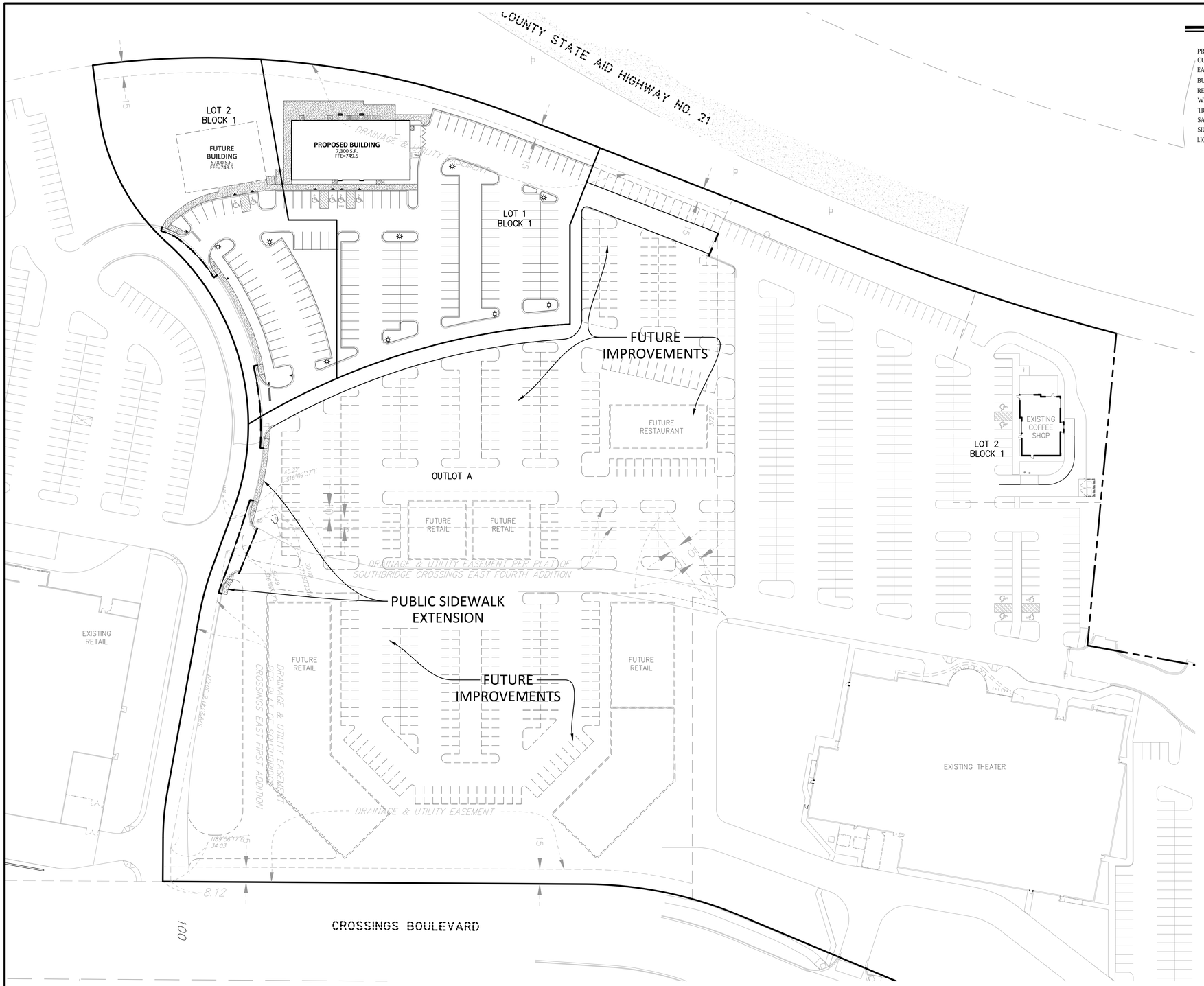

LEGEND

	PROPOSED	EXISTING	
PROPERTY LIMIT			STANDARD DUTY ASPHALT PAVING
CURB & GUTTER			HEAVY DUTY ASPHALT PAVING
EASEMENT			CONCRETE PAVING
BUILDING			CONCRETE SIDEWALK
RETAINING WALL		WL	
WETLAND LIMITS			
TREELINE			
SAWCUT LINE			
SIGN			
LIGHT POLE			

THE SUBSURFACE UTILITY INFORMATION SHOWN ON THESE PLANS IS A UTILITY QUALITY LEVEL D. THIS QUALITY LEVEL WAS DETERMINED ACCORDING TO THE GUIDELINES OF ASCE/CI 38-02, TITLED "STANDARD GUIDELINES FOR THE COLLECTION AND DEPICTION OF EXISTING SUBSURFACE UTILITY DATA." THE CONTRACTOR AND OR SUBCONTRACTORS SHALL DETERMINE THE EXACT LOCATION OF ALL EXISTING UTILITIES BEFORE COMMENCING WORK, BY CONTACTING THE NOTIFICATION CENTER (GOPHER STATE ONE FOR MINNESOTA), THE CONTRACTOR AND/OR SUBCONTRACTOR AGREE TO BE FULLY RESPONSIBLE FOR ANY AND ALL DAMAGES, WHICH MIGHT BE OCCASIONED BY HIS OR HER FAILURE TO EXACTLY LOCATE AND PRESERVE ANY AND ALL UTILITIES (UNDERGROUND AND OVERHEAD).

IF THE CONTRACTOR ENCOUNTERS ANY DRAIN TILE WITHIN THE SITE, HE OR SHE SHALL NOTIFY THE ENGINEER WITH THE LOCATION, SIZE, INVERT AND IF THE TILE LINE IS ACTIVE. NO DRAIN TILE SHALL BE BACKFILLED WITHOUT APPROVAL FROM THE PROJECT ENGINEER.

IT SHALL BE THE RESPONSIBILITY OF THE CONTRACTOR TO RELOCATE ALL EXISTING UTILITIES WHICH CONFLICT WITH THE PROPOSED IMPROVEMENTS SHOWN ON THE PLANS.

NORTH

0 50 100

SCALE IN FEET

Oct 18, 2018 - 5:22pm - User:jweyenberg L:\PROJECTS\20787\CAD\Civil\Sheets\20787-C301-OVRALL SITE.dwg

Sambatek
www.sambatek.com
12800 Whitewater Drive, Suite 300
Minnetonka, MN 55343
763.476.6010 telephone
763.476.8532 facsimile
Engineering | Surveying | Planning | Environmental

Client

SHAKOPEE CROSSINGS LIMITED PARTNERSHIP

8170 CARRIAGE COURT NORTH
SUITE 210
SHAKOPEE, MN 55379

Project

SOUTHBRIDGE CROSSINGS EAST 5TH ADDITION

Location

SHAKOPEE, MN

Certification

I hereby certify that this plan, specification or report was prepared by me or under my direct supervision and that I am a duly licensed professional ENGINEER under the laws of the state of Minnesota.

George D. Abernathy
Registration No. 43505 Date: 10/19/2018

If applicable, contact us for a wet signed copy of this plan which is available upon request at Sambatek's, Minnetonka, MN office.

Summary

Designed: GDA Drawn: JMW
Approved: BDB Book / Page:
Phase: PERMIT Initial Issued: 10/19/2018

Revision History

No.	Date	By	Submittal / Revision
A	10/19/18	JMW	Building Revisions

Sheet Title

OVERALL SITE PLAN

Sheet No. Revision

C3.01 A

Project No.

20787

LEGEND

	PROPOSED	EXISTING
PROPERTY LIMIT		
CURB & GUTTER		
CURB PER PLAN		
CURB BY OTHERS		
EASEMENT		
BUILDING		
RETAINING WALL		
WETLAND LIMITS		WL
TREELINE		
SAWCUT LINE		
SIGN		
NUMBER OF PARKING STALLS PER ROW	XX	
KEY NOTE	XX	
LIGHT POLE		
STORM SEWER STRUCTURE		
SANITARY SEWER STRUCTURE		
WATERMAIN STRUCTURE		

STANDARD DUTY ASPHALT PAVING	
HEAVY DUTY ASPHALT PAVING	
CONCRETE PAVING	
CONCRETE SIDEWALK	
ARCHITECTURAL PAVEMENT	

DEVELOPMENT SUMMARY

AREA

LOT 1, BLOCK 1	71,274 SF	1.64 AC
LOT 2, BLOCK 1	50,867 SF	1.17 AC

ZONING

EXISTING ZONING	PUD
PROPOSED ZONING	PUD

PARKING SUMMARY

LOT 1, BLOCK 1	
ϕνσ' ϕnc {€!{{{	111
ADA STALLS	4
LOT 2, BLOCK 1	
ϕνσ' ϕnc {€!{{{	39
ADA STALLS	2

LOT COVERAGE

LOT 1, BLOCK 1		
IMPERVIOUS	53,843 SF	76%
PERVIOUS	17,431 SF	24%
LOT 2, BLOCK 1		
IMPERVIOUS	24,610 SF	48%
PERVIOUS	26,257 SF	52%
TOTAL		
IMPERVIOUS	78,453 SF	64%
PERVIOUS	43,688 SF	36%

1 53,843 SF 76%

DEVELOPMENT NOTES

1. ALL DIMENSIONS ARE ROUNDED TO THE NEAREST TENTH FOOT.
2. ALL DIMENSIONS SHOWN ARE TO THE FACE OF CURB TO FACE OF CURB UNLESS OTHERWISE NOTED.
3. /hb€w!/€hw{I!{[w9±i9² t!±9a9b€Dw!5i9b€!b5/hb{€w¦/€ áD¦€€9w h¦€€²I9w9²!€9w 5w!lb{!²!¸Cwh a/¦w.ł ![[h€I9w!w9l{{I![[.9/hb{€w¦/€95!{áD¦€€9w lbé/¦w.ł COORDINATE WITH GRADING CONTRACTOR.
4. ALL AREAS ARE ROUNDED TO THE NEAREST SQUARE FOOT.
5. ALL PARKING STALLS TO BE 9' IN WIDTH AND 18' IN LENGTH UNLESS OTHERWISE INDICATED.
6. CONTRACTOR SHALL REFER TO ARCHITECTURAL PLANS FOR EXACT LOCATIONS AND DIMENSIONS OF EXIT PORCHES, RAMPS, PRECISE BUILDING DIMENSIONS AND EXACT BUILDING UTILITY ENTRANCE LOCATIONS.
7. SEE ARCHITECTURAL PLANS FOR LIGHT POLE FOUNDATION DETAIL AND FOR EXACT LOCATIONS OF LIGHT POLE.
8. REFER TO FINAL PLAT FOR LOT BOUNDARIES, LOT NUMBERS, LOT AREAS, AND LOT DIMENSIONS.
9. ALL GRADIENTS ON SIDEWALKS ALONG THE ADA ROUTE SHALL HAVE A MAXIMUM LONGITUDINAL SLOPE OF 5% (1:20), EXCEPT AT CURB RAMPS (1:12), AND A MAXIMUM CROSS SLOPE OF 2.08% (1:48). THE MAXIMUM SLOPE IN ANY DIRECTION ON AN ADA PARKING STALL OR ACCESS ISLE SHALL BE 2.08% (1:48). THE CONTRACTOR SHALL REVIEW AND VERIFY THE GRADIENT IN THE FIELD ALONG THE ADA ROUTES PRIOR TO PLACING CONCRETE OR BITUMINOUS PAVEMENT. THE CONTRACTOR SHALL NOTIFY THE ENGINEER IMMEDIATELY IF THERE IS A DISCREPANCY BETWEEN THE GRADIENT IN THE FIELD VERSUS THE DESIGN GRADIENT AND COORDINATE WITH GRADING CONTRACTOR.
10. "NO PARKING" SIGNS SHALL BE PLACED ALONG ALL DRIVEWAYS AS REQUIRED BY CITY.

KEY NOTES

A. BUILDING, STOOPS, STAIRS (SEE ARCHITECTURAL PLANS)
B. B-612 CONCRETE CURB AND GUTTER (SEE DETAIL 1003, SHEET C9.02)
C. B-618 6CONCRETE CURB AND GUTTER (SEE DETAIL 1003, SHEET C9.02)
D. CONCRETE APRON
E. FLAT CURB SECTION (SEE DETAIL 02, SHEET C9.01)
F. TRANSITION CURB TO MATCH EXISTING
G. ACCESSIBLE RAMP (SEE STANDARD PLAN, SHEET C9.02)
H. ACCESSIBLE STALL STRIPING (SEE DETAIL 05, SHEET C9.01)
I. ACCESSIBLE PARKING SIGN (SEE DETAIL 04, SHEET C9.01)
J. CONCRETE TRANSFORMER PAD (COORDINATE WITH ARCH/MEP/SPUC)
K. CONCRETE SIDEWALK (SEE DETAIL 01, SHEET C9.01)
L. TRASH ENCLOSURE (SEE ARCHITECTURAL PLANS)
M. TAPERED CURB SECTION
N. EDGE OF BITUMINOUS
O. SAWCUT/MATCH EXISTING PAVEMENT (SEE DETAIL 02, SHEET C9.04)
P. END SECTION CURB & GUTTER (SEE DETAIL 03, SHEET C9.01)
Q. STOP SIGN (R1-1)
R. BICYCLE PARKING

THE SUBSURFACE UTILITY INFORMATION SHOWN ON THESE PLANS IS A UTILITY QUALITY LEVEL D. THIS QUALITY LEVEL WAS DETERMINED ACCORDING TO THE GUIDELINES OF ASCE/CI 38-02, TITLED "STANDARD GUIDELINES FOR THE COLLECTION AND DEPICTION OF EXISTING SUBSURFACE UTILITY DATA." THE CONTRACTOR AND/OR SUBCONTRACTORS SHALL DETERMINE THE EXACT LOCATION OF ALL EXISTING UTILITIES BEFORE COMMENCING WORK, BY CONTACTING THE NOTIFICATION CENTER (GOPHER STATE ONE FOR MINNESOTA). THE CONTRACTOR AND/OR SUBCONTRACTOR AGREE TO BE FULLY RESPONSIBLE FOR ANY AND ALL DAMAGES, WHICH MIGHT BE OCCASIONED BY HIS OR HER FAILURE TO EXACTLY LOCATE AND PRESERVE ANY AND ALL UTILITIES (UNDERGROUND AND OVERHEAD).

IF THE CONTRACTOR ENCOUNTERS ANY DRAIN TILE WITHIN THE SITE, HE OR SHE SHALL NOTIFY THE ENGINEER WITH THE LOCATION, SIZE, INVERT AND IF THE TILE LINE IS ACTIVE. NO DRAIN TILE SHALL BE BACKFILLED WITHOUT APPROVAL FROM THE PROJECT ENGINEER.

IT SHALL BE THE RESPONSIBILITY OF THE CONTRACTOR TO RELOCATE ALL EXISTING UTILITIES WHICH CONFLICT WITH THE PROPOSED IMPROVEMENTS SHOWN ON THE PLANS.

NORTH

0 30 60

SCALE IN FEET

Sambatek
www.sambatek.com
12800 Whitewater Drive, Suite 300
Minnetonka, MN 55343
763.476.6010 telephone
763.476.8532 facsimile
Engineering | Surveying | Planning | Environmental

Client

SHAKOPEE CROSSINGS LIMITED PARTNERSHIP

8170 CARRIAGE COURT NORTH
SUITE 210
SHAKOPEE, MN 55379

Project

SOUTHBRIDGE CROSSINGS EAST 5TH ADDITION

Location

SHAKOPEE, MN

Certification

I hereby certify that this plan, specification or report was prepared by me or under my direct supervision and that I am a duly licensed professional ENGINEER under the laws of the state of Minnesota.

George D. Abernathy
Registration No. 43505 Date: 10/19/2018

If applicable, contact us for a wet signed copy of this plan which is available upon request at Sambatek's, Minnetonka, MN office.

Summary

Designed: GDA Drawn: JMW
Approved: BDB Book / Page:
Phase: PERMIT Initial Issued: 10/19/2018

Revision History

No.	Date	By	Submittal / Revision
A	10/19/18	JMW	Building Revisions

Sheet Title
SITE PLAN

Sheet No. Revision
C3.02 A

Project No. 20787

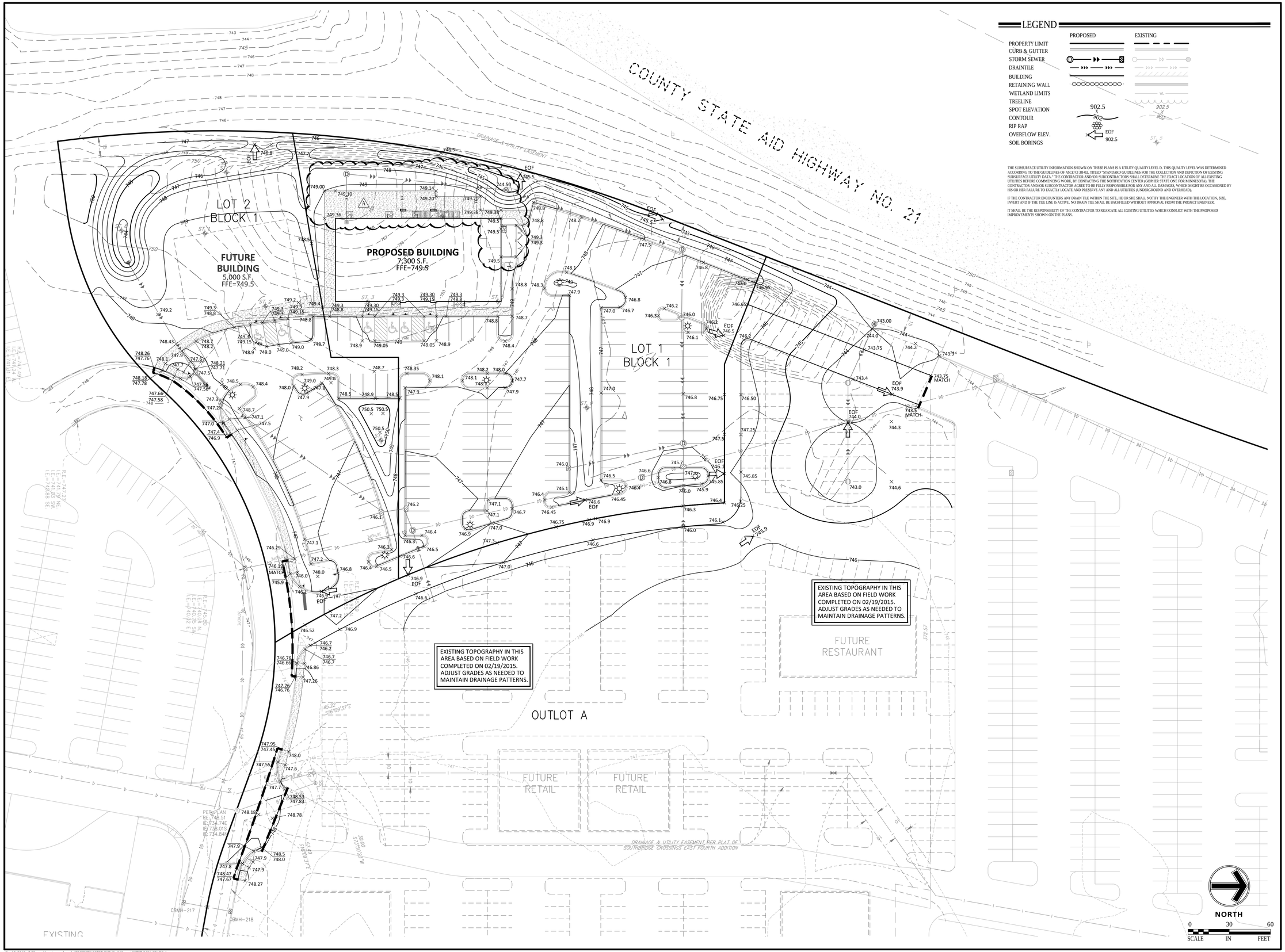

LEGEND

	PROPOSED	EXISTING
PROPERTY LIMIT		
CURB & GUTTER		
STORM SEWER		
DRAINTILE		
BUILDING		
RETAINING WALL		
WETLAND LIMITS		WL
TREELINE		
SPOT ELEVATION	902.5	902.5
CONTOUR	902	902
RIP RAP		
OVERFLOW ELEV.	EOF 902.5	
SOIL BORINGS		ST 5

THE SUBSURFACE UTILITY INFORMATION SHOWN ON THESE PLANS IS A UTILITY QUALITY LEVEL D. THIS QUALITY LEVEL WAS DETERMINED ACCORDING TO THE GUIDELINES OF ASCE/CI 38-02, TITLED "STANDARD GUIDELINES FOR THE COLLECTION AND DEPICTION OF EXISTING SUBSURFACE UTILITY DATA." THE CONTRACTOR AND/OR SUBCONTRACTORS SHALL DETERMINE THE EXACT LOCATION OF ALL EXISTING UTILITIES BEFORE COMMENCING WORK, BY CONTACTING THE NOTIFICATION CENTER (GOPHER STATE ONE FOR MINNESOTA). THE CONTRACTOR AND/OR SUBCONTRACTOR AGREE TO BE FULLY RESPONSIBLE FOR ANY AND ALL DAMAGES, WHICH MIGHT BE OCCASIONED BY HIS OR HER FAILURE TO EXACTLY LOCATE AND PRESERVE ANY AND ALL UTILITIES (UNDERGROUND AND OVERHEAD).

IF THE CONTRACTOR ENCOUNTERS ANY DRAIN TILE WITHIN THE SITE, HE OR SHE SHALL NOTIFY THE ENGINEER WITH THE LOCATION, SIZE, INVERT AND IF THE TILE LINE IS ACTIVE. NO DRAIN TILE SHALL BE BACKFILLED WITHOUT APPROVAL FROM THE PROJECT ENGINEER.

IT SHALL BE THE RESPONSIBILITY OF THE CONTRACTOR TO RELOCATE ALL EXISTING UTILITIES WHICH CONFLICT WITH THE PROPOSED IMPROVEMENTS SHOWN ON THE PLANS.

Sambatek
www.sambatek.com
12800 Whitewater Drive, Suite 300
Minnetonka, MN 55343
763.476.6010 telephone
763.476.8532 facsimile
Engineering | Surveying | Planning | Environmental

Client

SHAKOPEE CROSSINGS LIMITED PARTNERSHIP

8170 CARRIAGE COURT NORTH
SUITE 210
SHAKOPEE, MN 55379

Project

SOUTHBRIDGE CROSSINGS EAST 5TH ADDITION

Location

SHAKOPEE, MN

Certification

I hereby certify that this plan, specification or report was prepared by me or under my direct supervision and that I am a duly licensed professional ENGINEER under the laws of the state of Minnesota.

George D. Abernathy
Registration No. 43505 Date: 10/19/2018

If applicable, contact us for a wet signed copy of this plan which is available upon request at Sambatek's, Minnetonka, MN office.

Summary

Designed: GDA Drawn: JMW
Approved: BDB Book / Page:
Phase: PERMIT Initial Issued: 10/19/2018

Revision History

No.	Date	By	Submittal / Revision
A	10/19/18	JMW	Building Revisions

Sheet Title

GRADING PLAN

Sheet No. Revision

C4.01 A

Project No. 20787

GRADING NOTES

1. PROPOSED CONTOURS ARE TO FINISHED SURFACE ELEVATION. SPOT ELEVATIONS ALONG PROPOSED CURB DENOTE GUTTER GRADE.

2. /hb¢w!/¢hw{!![[u9#9²!+9a9b¢Dw!59b¢!b5/hb{¢w'/¢dD'€¢9w h'€€ ² I9w9 ²!¢9w 5w!ib{!²!¸ Cwh a /'w.¹ ![[h¢I9w !w9![{!![[.9/hb{¢w'/¢95 ![dD'€¢9w ibé/'w.¹

3. ALL GRADIENT ON SIDEWALKS ALONG THE ADA ROUTE SHALL HAVE A MAXIMUM LONGITUDINAL SLOPE OF 5% (1:20), EXCEPT AT CURB RAMPS (1:12), AND A MAXIMUM CROSS SLOPE OF 2.08% (1:48). MAXIMUM SLOPE IN ANY DIRECTION ON AN ADA PARKING STALL OR ACCESS AISLE SHALL BE IN 2.08% (1:48). CONTRACTOR SHALL REVIEW AND VERIFY THE GRADIENT IN THE FIELD ALONG THE ADA ROUTES PRIOR TO PLACING CONCRETE OR BITUMINOUS. CONTRACTOR SHALL NOTIFY THE ENGINEER IMMEDIATELY IF THERE IS A DISCREPANCY BETWEEN THE GRADIENT IN THE FIELD VERSUS THE DESIGN GRADIENT. COORDINATE ALL WORK WITH PAVING CONTRACTOR.

4. CONTRACTOR SHALL TAKE ALL PRECAUTIONS NECESSARY TO AVOID PROPERTY DAMAGE TO ADJACENT PROPERTIES DURING THE CONSTRUCTION PHASES OF THIS PROJECT. CONTRACTOR WILL BE HELD SOLELY RESPONSIBLE FOR ANY DAMAGES TO THE ADJACENT PROPERTIES OCCURRING DURING THE CONSTRUCTION PHASES OF THIS PROJECT.

5. SAFETY NOTICE TO CONTRACTORS: IN ACCORDANCE WITH GENERALLY ACCEPTED CONSTRUCTION PRACTICES, CONTRACTOR WILL BE SOLELY AND COMPLETELY RESPONSIBLE FOR CONDITIONS ON THE JOB SITE, INCLUDING SAFETY OF ALL PERSONS AND PROPERTY DURING PERFORMANCE OF THE WORK. THIS REQUIREMENT WILL APPLY CONTINUOUSLY AND NOT BE LIMITED TO NORMAL WORKING HOURS. THE DUTY OF THE ENGINEER OR THE DEVELOPER TO CONDUCT CONSTRUCTION REVIEW OF THE CONTRACTOR'S PERFORMANCE IS NOT INTENDED TO INCLUDE REVIEW OF THE ADEQUACY OF THE CONTRACTOR'S SAFETY MEASURES IN, ON OR NEAR THE CONSTRUCTION SITE.

6. CONTRACTOR SHALL COMPLETE THE SITE GRADING CONSTRUCTION IN ACCORDANCE WITH THE REQUIREMENTS OF THE OWNER'S SOILS ENGINEER. ALL SOIL TESTING SHALL BE COMPLETED BY THE OWNER'S SOILS ENGINEER. CONTRACTOR SHALL BE RESPONSIBLE FOR COORDINATING ALL REQUIRED SOIL TESTS AND INSPECTIONS WITH THE SOILS ENGINEER.

   A GEOTECHNICAL ENGINEERING SOILS REPORT HAS BEEN COMPLETED BY:

   COMPANY: BRAUN INTERTEC
   ADDRESS: 11001 HAMPSHIRE AVE S, MPLS, MN 55438
   PHONE: 952-995-2000
   DATED: OCTOBER 11, 2017

   CONTRACTOR SHALL OBTAIN A COPY OF THE SOILS REPORT.

7. CONTRACTOR SHALL COMPLETE DEWATERING AS REQUIRED TO COMPLETE THE SITE GRADING CONSTRUCTION.

8. PRIOR TO PLACEMENT OF THE AGGREGATE BASE, A TEST ROLL SHALL BE PERFORMED ON THE STREET AND PARKING AREA SUBGRADE. CONTRACTOR SHALL PROVIDE A LOADED TANDEM AXLE TRUCK WITH A GROSS WEIGHT OF 25 TONS. THE TEST ROLLING SHALL BE AT THE DIRECTION OF THE SOILS ENGINEER AND SHALL BE COMPLETED IN AREAS AS DIRECTED BY THE SOILS ENGINEER. CORRECTION OF THE SUBGRADE SOILS SHALL BE COMPLETED IN ACCORDANCE WITH THE REQUIREMENTS OF THE SOILS ENGINEER.

9. REPLACE ALL SUBGRADE SOIL DISTURBED DURING THE CONSTRUCTION THAT HAVE BECOME UNSUITABLE AND WILL NOT PASS A TEST ROLL. REMOVE UNSUITABLE SOIL FROM THE SITE AND IMPORT SUITABLE SOIL AT NO ADDITIONAL COST TO THE OWNER.

10. CONTRACTOR SHALL BE RESPONSIBLE FOR PROVIDING AND MAINTAINING VEHICULAR AND PEDESTRIAN TRAFFIC CONTROL DEVICES SUCH AS BARRICADES, WARNING SIGNS, DIRECTIONAL SIGNS, FLAGMEN AND LIGHTS TO CONTROL THE MOVEMENT OF TRAFFIC WHERE NECESSARY. TRAFFIC CONTROL DEVICES SHALL CONFORM TO APPROPRIATE MINNESOTA DEPARTMENT OF TRANSPORTATION STANDARDS.

11. EXISTING TREES AND OTHER NATURAL VEGETATION WITHIN THE PROJECT AND/OR ADJACENT TO THE PROJECT ARE OF PRIME CONCERN TO THE CONTRACTOR'S OPERATIONS AND SHALL BE A RESTRICTED AREA. CONTRACTOR SHALL PROTECT TREES TO REMAIN AT ALL TIMES. EQUIPMENT SHALL NOT NEEDLESSLY BE OPERATED UNDER NEARBY TREES AND EXTREME CAUTION SHALL BE EXERCISED WHEN WORKING ADJACENT TO TREES. SHOULD ANY PORTION OF THE TREE BRANCHES REQUIRE REMOVAL TO PERMIT OPERATION OF THE CONTRACTOR'S EQUIPMENT, CONTRACTOR SHALL OBTAIN THE SERVICES OF A PROFESSIONAL TREE TRIMMING SERVICE TO TRIM THE TREES PRIOR TO THE BEGINNING OF OPERATION. SHOULD CONTRACTOR'S OPERATIONS RESULT IN THE BREAKING OF ANY LIMBS, THE BROKEN LIMBS SHOULD BE REMOVED IMMEDIATELY AND CUTS SHALL BE PROPERLY PROTECTED TO MINIMIZE ANY LASTING DAMAGE TO THE TREE. NO TREES SHALL BE REMOVED WITHOUT AUTHORIZATION BY THE ENGINEER. COSTS FOR TRIMMING SERVICES SHALL BE CONSIDERED INCIDENTAL TO THE GRADING CONSTRUCTION AND NO SPECIAL PAYMENT WILL BE MADE.

    11.a. RESTRICTED AREAS SHALL INCLUDE ALL DESIGNATED TREED AREAS OUTSIDE OF THE DESIGNATED CONSTRUCTION ZONE. ALL VEGETATION WITHIN THE RESTRICTED AREAS SHALL REMAIN.

    11.b. CONTRACTOR SHALL RESTRICT ALL GRADING AND CONSTRUCTION ACTIVITIES TO AREAS DESIGNATED ON THE PLANS. ACTIVITIES WITHIN THE CONSTRUCTION MAY BE RESTRICTED TO A NARROWER WIDTH IN THE FIELD TO SAVE ADDITIONAL TREES AS DIRECTED BY THE OWNER.

    11.c. ACTIVITIES PROHIBITED OUTSIDE OF THE CONSTRUCTION BOUNDARIES WOULD INCLUDE, BUT NOT BE LIMITED TO: SOIL AND OTHER MATERIAL STOCKPILING, EQUIPMENT OR MACHINERY STORAGE, DRIVING OF ANY VEHICLE, [9!Y!D9 hw{¤[[!D9 hC!b¸ä²!{!h¸€¢ hw h¢I9w h¢I9w €h-i/ a !€9w!![¤ €!9/h[[9/€!hb hC h¢I9w 59.w{ AND SOIL STOCKPILING WILL BE IN AN AREA DETERMINED ON-SITE BY THE ENGINEER.

    11.d. ALL RESTRICTED AREAS SHALL BE FENCED OFF WITH BRIGHT ORANGE POLYETHYLENE SAFETY NETTING AND STEEL STAKES AS SHOWN ON THE TREE PROTECTION DETAIL. AT NO TIME SHALL THIS FENCING BE REMOVED OR ACTIVITY OF ANY KIND TAKE PLACE WITHIN IT. FINAL PLACEMENT OF ALL PROTECTIVE FENCING SHALL BE COMPLETE BEFORE ANY WORK COMMENCES ON-SITE.

    11.e. BEFORE COMMENCING WITH ANY EXCAVATION CONTRACTOR SHALL COMPLETE ALL PREPARATORY WORK REGARDING TREE REMOVAL, ROOT PRUNING, TREE PRUNING AND STUMP REMOVAL TO THE SATISFACTION OF THE OWNER.

    11.f. PREPARATORY WORK SHALL INCLUDE THE FOLLOWING AND SHALL BE COMPLETED UNDER THE DIRECT SUPERVISION OF THE OWNER'S REPRESENTATIVE:

    11.f.a. TREE REMOVAL: CONTRACTOR SHALL FELL THE TREES. AT NO TIME SHALL TREES BE BULLDOZED OUT, BUT SHALL BE CUT DOWN AND STUMPS REMOVED SEPARATELY. PRIOR TO THE FELLING OF ALL TREES, PROPER REMOVAL OF A PORTION OR ALL OF THE CANOPY SHALL BE COMPLETED SO THAT TREES IN THE RESTRICTED AREAS SHALL NOT BE INJURED IN THE PROCESS.

    11.f.b. ROOT PRUNING: BEFORE ANY STUMPS ARE TO BE REMOVED, ALL ROOTS SHALL BE SEVERED FROM ROOTS IN THE RESTRICTED AREAS BY SAW CUTTING WITH A VERMEER DESIGNED FOR ROOT PRUNING, BY HAND, OR WITH A CHAINSAW. TREE ROOTS PROJECTING INTO THE CONSTRUCTION ZONE SHALL BE EXPOSED PRIOR TO ROOT PRUNING WITH SMALL MACHINERY, I.E..., BOBCAT.

    11.f.c. STUMP REMOVAL: AT SUCH TIME THAT ROOTS HAVE BEEN PROPERLY SEVERED, STUMPS MAY BE REMOVED. WHERE REMOVAL OF CERTAIN STUMPS COULD CAUSE DAMAGE TO EXISTING PROTECTED TREES, TREE STUMPS SHALL BE GROUND OUT. ALL STUMP REMOVAL SHALL BE UNDER THE DIRECT SUPERVISION OF THE OWNER'S REPRESENTATIVE.

    11.f.d. TREE PRUNING: PROPER PRUNING OF TREES IN THE RESTRICTED ZONE SHALL BE DIRECTED BY AND SUPERVISION AT ALL TIMES BY THE OWNER'S REPRESENTATIVE.

    11.g. AN OWNER'S REPRESENTATIVE WILL BE AVAILABLE AT ALL TIMES DURING THE PREPARATORY AND CONSTRUCTION PERIOD.

    11.h. MULCH RATHER THAN SEED OR SOD WILL BE USED AT THE BASE OF QUALITY TREES TO A PERIMETER DETERMINED BY THE OWNER'S REPRESENTATIVE. AREAS TO BE SEEDED FOR EROSION CONTROL PURPOSES WITHIN THE CONSTRUCTION ZONE ARE TO BE DETERMINED BY THE OWNER'S REPRESENTATIVE. NATURAL GROUND COVER WILL BE MAINTAINED WHEREVER POSSIBLE.

    11.i. THE USE OF RETAINING WALLS NEAR TREES, IN ADDITION TO THOSE REQUIRED ON THE PLANS SHALL BE DETERMINED IN THE FIELD, BASED ON TREE LOCATIONS AND TOPOGRAPHY.

12. EXCAVATE TOPSOIL FROM AREAS TO BE FURTHER EXCAVATED OR REGRADED AND STOCKPILE IN AREAS DESIGNATED ON THE SITE. CONTRACTOR SHALL SALVAGE ENOUGH TOPSOIL FOR RESPREADING ON THE SITE AS SPECIFIED. EXCESS TOPSOIL SHALL BE PLACED IN EMBANKMENT AREAS, OUTSIDE OF BUILDING PADS, ROADWAYS AND PARKING AREAS. CONTRACTOR SHALL SUBCUT CUT AREAS, WHERE TURF IS TO BE ESTABLISHED, TO A DEPTH OF 6 INCHES. RESPREAD TOPSOIL IN AREAS WHERE TURF IS TO BE ESTABLISHED TO A MINIMUM DEPTH OF 6 INCHES.

13. ¢w9b/I .hwwh²/hb{¢w¦/¢ihb!iC!i[[h²95 ¸¸ €!9 h²b9¢/hb¢w!/¢hw{!![[/h a t[9€9¢w9b/I .hwwh²é EXCAVATION IN AREAS DIRECTED BY THE ENGINEER IN ORDER TO OBTAIN STRUCTURAL MATERIAL. TREES SHALL NOT BE REMOVED OR DAMAGED AS A RESULT OF THE EXCAVATION, UNLESS APPROVED BY THE ENGINEER. THE EXCAVATION SHALL COMMENCE A MINIMUM OF 10 FEET FROM THE LIMIT OF THE BUILDING PAD. THE EXCAVATION FROM THIS LIMIT SHALL EXTEND AT A MINIMUM SLOPE OF 1 FOOT HORIZONTAL TO 1 FOOT VERTICAL (1:1) DOWNWARD AND OUTWARD FROM THE FINISHED SURFACE GRADE ELEVATION. THE TRENCH BORROW EXCAVATION SHALL BE BACKFILLED TO THE PROPOSED FINISHED GRADE ELEVATION, AND SHALL BE COMPACTED IN ACCORDANCE WITH REQUIREMENTS OF THE QUALITY COMPACTION METHOD AS OUTLINED IN MN/DOT SPECIFICATION 2105.3F2. SNOW FENCE SHALL BE FURNISHED AND PLACED ALONG THE PERIMETER OF THE TRENCH BORROW AREA WHERE THE SLOPES EXCEED 2 FOOT HORIZONTAL TO 1 FOOT VERTICAL (2:1).

14. FINISHED GRADING SHALL BE COMPLETED, CONTRACTOR SHALL UNIFORMLY GRADE AREAS WITHIN LIMITS OF GRADING, INCLUDING ADJACENT TRANSITION AREAS. PROVIDE A SMOOTH FINISHED SURFACE WITHIN SPECIFIED TOLERANCES, WITH UNIFORM LEVELS OR SLOPES BETWEEN POINTS WHERE ELEVATIONS ARE SHOWN, OR BETWEEN SUCH POINTS AND EXISTING GRADES. AREAS THAT HAVE BEEN FINISHED GRADED SHALL BE PROTECTED FROM SUBSEQUENT CONSTRUCTION OPERATIONS, TRAFFIC AND EROSION. REPAIR ALL AREAS THAT HAVE BECOME RUTTED, ERODED OR HAS SETTLED BELOW THE CORRECT GRADE. ALL AREAS DISTURBED BY THE CONTRACTOR'S OPERATIONS SHALL BE RESTORED TO EQUAL OR BETTER THAN ORIGINAL CONDITION OR TO THE REQUIREMENTS OF THE NEW WORK.

15. TOLERANCES

    15.a. THE COMMERCIAL BUILDING SUBGRADE FINISHED SURFACE ELEVATION SHALL NOT VARY BY MORE THAN 0.10 FOOT ABOVE, OR 0.10 FOOT BELOW, THE PRESCRIBED ELEVATION AT ANY POINT WHERE MEASUREMENT IS MADE.

    15.b. THE STREET OR PARKING AREA SUBGRADE FINISHED SURFACE ELEVATION SHALL NOT VARY BY MORE THAN 0.05 FOOT ABOVE, OR 0.10 FOOT BELOW, THE PRESCRIBED ELEVATION OF ANY POINT WHERE MEASUREMENT IS MADE.

    15.c. AREAS WHICH ARE TO RECEIVE TOPSOIL SHALL BE GRADED TO WITHIN 0.30 FOOT ABOVE OR BELOW THE REQUIRED ELEVATION, UNLESS DIRECTED OTHERWISE BY THE ENGINEER.

    15.d. TOPSOIL SHALL BE GRADED TO PLUS OR MINUS 1/2 INCH OF THE SPECIFIED THICKNESS.

16. AFTER THE SITE GRADING IS COMPLETED, IF EXCESS OR SHORTAGE OF SOIL MATERIAL EXISTS, CONTRACTOR SHALL TRANSPORT ALL EXCESS SOIL MATERIAL OFF THE SITE TO AN AREA SELECTED BY THE CONTRACTOR, OR IMPORT SUITABLE MATERIAL TO THE SITE.

17. CONTRACTOR SHALL DETERMINE THE LOCATION OF ANY HAUL ROADS THAT MAY BE REQUIRED TO COMPLETE THE SITE D¤!5ibD/hb{¢w¦/¢ihb!b5{I!![ib5i/!¢9 I!¸|wh!5{hb 9wh{ihb !b5 (95.a 9b¢/hb¢wh[á{¢9 a !t¢ CONTRACTOR SHALL COMPLY WITH THE REQUIREMENTS OF THE GOVERNING AUTHORITY OF EACH ROADWAY. CONTRACTOR SHALL POST WHATEVER SECURITY, AND COMPLY WITH ALL CONDITIONS WHICH ARE REQUIRED BY EACH GOVERNING AUTHORITY OF EACH ROADWAY.

18. FILL PLACED WITHIN THE BUILDING PAD AREAS SHALL BE IN CONFORMANCE WITH HUD/FHA PROCEDURES AND DATA SHEET 79G.

Sambatek
www.sambatek.com
12800 Whitewater Drive, Suite 300
Minnetonka, MN 55343
763.476.6010 telephone
763.476.8532 facsimile
Engineering | Surveying | Planning | Environmental

Client
SHAKOPEE CROSSINGS LIMITED PARTNERSHIP
8170 CARRIAGE COURT NORTH
SUITE 210
SHAKOPEE, MN 55379

Project
SOUTHBRIDGE CROSSINGS EAST 5TH ADDITION

Location
SHAKOPEE, MN

Certification
I hereby certify that this plan, specification or report was prepared by me or under my direct supervision and that I am a duly licensed professional ENGINEER under the laws of the state of Minnesota.

George D. Abernathy
Registration No. 43505 Date: 10/19/2018

If applicable, contact us for a wet signed copy of this plan which is available upon request at Sambatek's, Minnetonka, MN office.

Summary
Designed: GDA Drawn: JMW
Approved: BDB Book / Page:
Phase: PERMIT Initial Issued: 10/19/2018

Revision History
No.	Date	By	Submittal / Revision
A	10/19/18	JMW	Building Revisions

Sheet Title
GRADING NOTES

Sheet No. Revision
C4.02 A

Project No.
20787

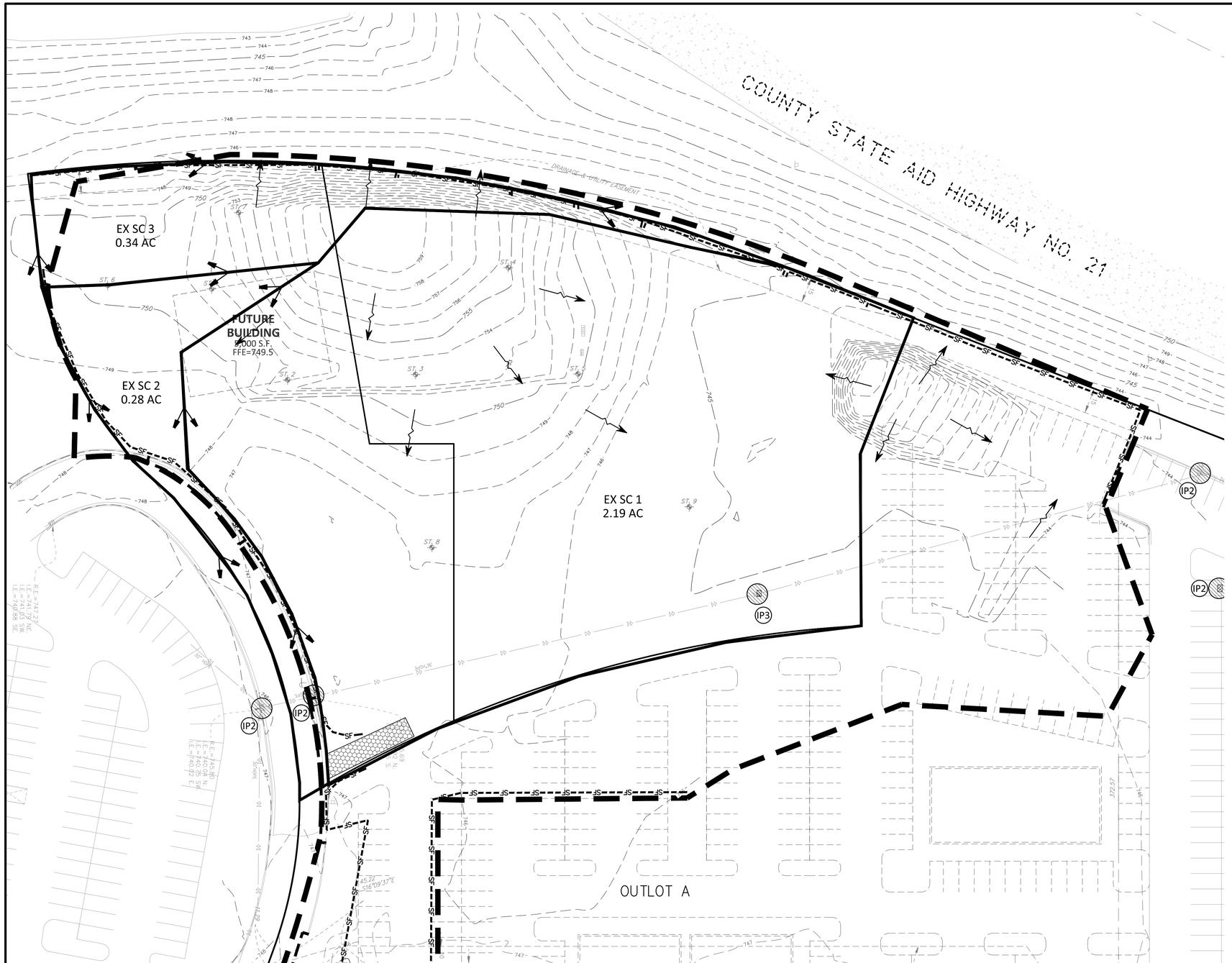

LEGEND

	PROPOSED	EXISTING
CURB & GUTTER		
STORM SEWER		
DRAINTILE		
CONTOUR	902	902
RIP RAP		
OVERFLOW ELEV.	EOF 902.5	
SILT FENCE	SF	
SILT DIKE	SD	
LIMITS OF DISTURBANCE		
SOIL BORINGS		ST. 5
DIRECTION OF OVERLAND FLOW		
TEMPORARY DIVERSION DITCH		
CHECK DAM		
LIMITS OF DRAINAGE SUB-BASIN		
BIO-ROLL		
INLET PROTECTION DEVICE 1	IP-1	
INLET PROTECTION DEVICE 2	IP-2	
INLET PROTECTION DEVICE 3	IP-3	
TEMPORARY STONE CONSTRUCTION ENTRANCE		
TEMPORARY SEDIMENT BASIN	SB	
TEMPORARY STORAGE AND PARKING AREA	TS	
TEMPORARY STABILIZATION MEASURES (SEED, MULCH, MATS OR BLANKETS AS OUTLINED IN THE SWPPP)	TSM	

NOTE TO CONTRACTOR

THE EROSION CONTROL PLAN SHEETS ALONG WITH THE REST OF THE SWPPP MUST BE KEPT ONSITE UNTIL THE NOTICE OF TERMINATION IS FILED WITH THE MPCA, THE CONTRACTOR MUST UPDATE THE SWPPP, INCLUDING THE EROSION CONTROL PLAN SHEETS AS NECESSARY TO INCLUDE ADDITIONAL REQUIREMENTS, SUCH AS ADDITIONAL OR MODIFIED BMPS DESIGNED TO CORRECT PROBLEMS IDENTIFIED. AFTER FILING THE NOTICE OF TERMINATION, THE SWPPP, INCLUDING THE EROSION CONTROL PLAN SHEETS, AND ALL REVISIONS TO IT MUST BE SUBMITTED TO THE OWNER, TO BE KEPT ON FILE IN ACCORDANCE WITH THE RECORD RETENTION REQUIREMENTS DESCRIBED IN THE SWPPP NARRATIVE.

EROSION CONTROL MATERIALS QUANTITIES

ITEM	UNIT	QUANTITY
SILT FENCE	LINEAR FEET	1590
SILT DIKE	LINEAR FEET	0
BIO-ROLL	LINEAR FEET	0
CONSTRUCTION ENTRANCE	UNIT	1
INLET PROTECTION DEVICE (IP-1)	UNIT	0
INLET PROTECTION DEVICE (IP-2)	UNIT	5
INLET PROTECTION DEVICE (IP-3)	UNIT	1

* REFER TO SHEET C5.03 FOR GENERAL NOTES, MAINTENANCE NOTES, LOCATION MAPS, AND STANDARD DETAILS

THE SUBSURFACE UTILITY INFORMATION SHOWN ON THESE PLANS IS A UTILITY QUALITY LEVEL D. THIS QUALITY LEVEL WAS DETERMINED ACCORDING TO THE GUIDELINES OF ASCE/CI 38-02, TITLED "STANDARD GUIDELINES FOR THE COLLECTION AND DEPICTION OF EXISTING SUBSURFACE UTILITY DATA." THE CONTRACTOR AND/OR SUBCONTRACTORS SHALL DETERMINE THE EXACT LOCATION OF ALL EXISTING UTILITIES BEFORE COMMENCING WORK, BY CONTACTING THE NOTIFICATION CENTER (GOPHER STATE ONE FOR MINNESOTA). THE CONTRACTOR AND/OR SUBCONTRACTOR AGREE TO BE FULLY RESPONSIBLE FOR ANY AND ALL DAMAGES, WHICH MIGHT BE OCCASIONED BY HIS OR HER FAILURE TO EXACTLY LOCATE AND PRESERVE ANY AND ALL UTILITIES (UNDERGROUND AND OVERHEAD).

IF THE CONTRACTOR ENCOUNTERS ANY DRAIN TILE WITHIN THE SITE, HE OR SHE SHALL NOTIFY THE ENGINEER WITH THE LOCATION, SIZE, INVERT AND IF THE TILE LINE IS ACTIVE. NO DRAIN TILE SHALL BE BACKFILLED WITHOUT APPROVAL FROM THE PROJECT ENGINEER.

IT SHALL BE THE RESPONSIBILITY OF THE CONTRACTOR TO RELOCATE ALL EXISTING UTILITIES WHICH CONFLICT WITH THE PROPOSED IMPROVEMENTS SHOWN ON THE PLANS.

SOIL EROSION / SEDIMENTATION CONTROL OPERATION TIME SCHEDULE

CONSTRUCTION SEQUENCE	JAN	FEB	MAR	APR	MAY	JUN	JUL	AUG	SEP	OCT	NOV	DEC	JAN	FEB	MAR	APR	MAY	JUN
TEMPORARY CONTROL MEASURES																		
STRIP & STOCKPILE TOPSOIL																		
ROUGH GRADE / SEDIMENT CONTROL																		
TEMPORARY CONSTRUCTION ROADS																		
FOUNDATION / BUILDING CONSTRUCTION																		
SITE CONSTRUCTION																		
PERMANENT CONTROL STRUCTURES																		
FINISH GRADING																		
LANDSCAPING / SEED / FINAL STABILIZATION																		
STORM FACILITIES																		

NOTE: CONTRACTOR OR GENERAL CONTRACTOR TO COMPLETE TABLE WITH THEIR SPECIFIC PROJECT SCHEDULE

NORTH

0 30 60

SCALE IN FEET

Sambatek
www.sambatek.com
12800 Whitewater Drive, Suite 300
Minnetonka, MN 55343
763.476.6010 telephone
763.476.8532 facsimile
Engineering | Surveying | Planning | Environmental

Client

SHAKOPEE CROSSINGS LIMITED PARTNERSHIP

8170 CARRIAGE COURT NORTH
SUITE 210
SHAKOPEE, MN 55379

Project

SOUTHBRIDGE CROSSINGS EAST 5TH ADDITION

Location

SHAKOPEE, MN

Certification

I hereby certify that this plan, specification or report was prepared by me or under my direct supervision and that I am a duly licensed professional ENGINEER under the laws of the state of Minnesota.

George D. Abernathy
Registration No. 43505 Date: 10/19/2018

If applicable, contact us for a wet signed copy of this plan which is available upon request at Sambatek's, Minnetonka, MN office.

Summary

Designed: GDA Drawn: JMW
Approved: BDB Book / Page:
Phase: PERMIT Initial Issued: 10/19/2018

Revision History

No.	Date	By	Submittal / Revision
A	10/19/18	JMW	Building Revisions

Sheet Title

PHASE I EROSION CONTROL PLAN

Sheet No. Revision

C5.01 A

Project No. 20787

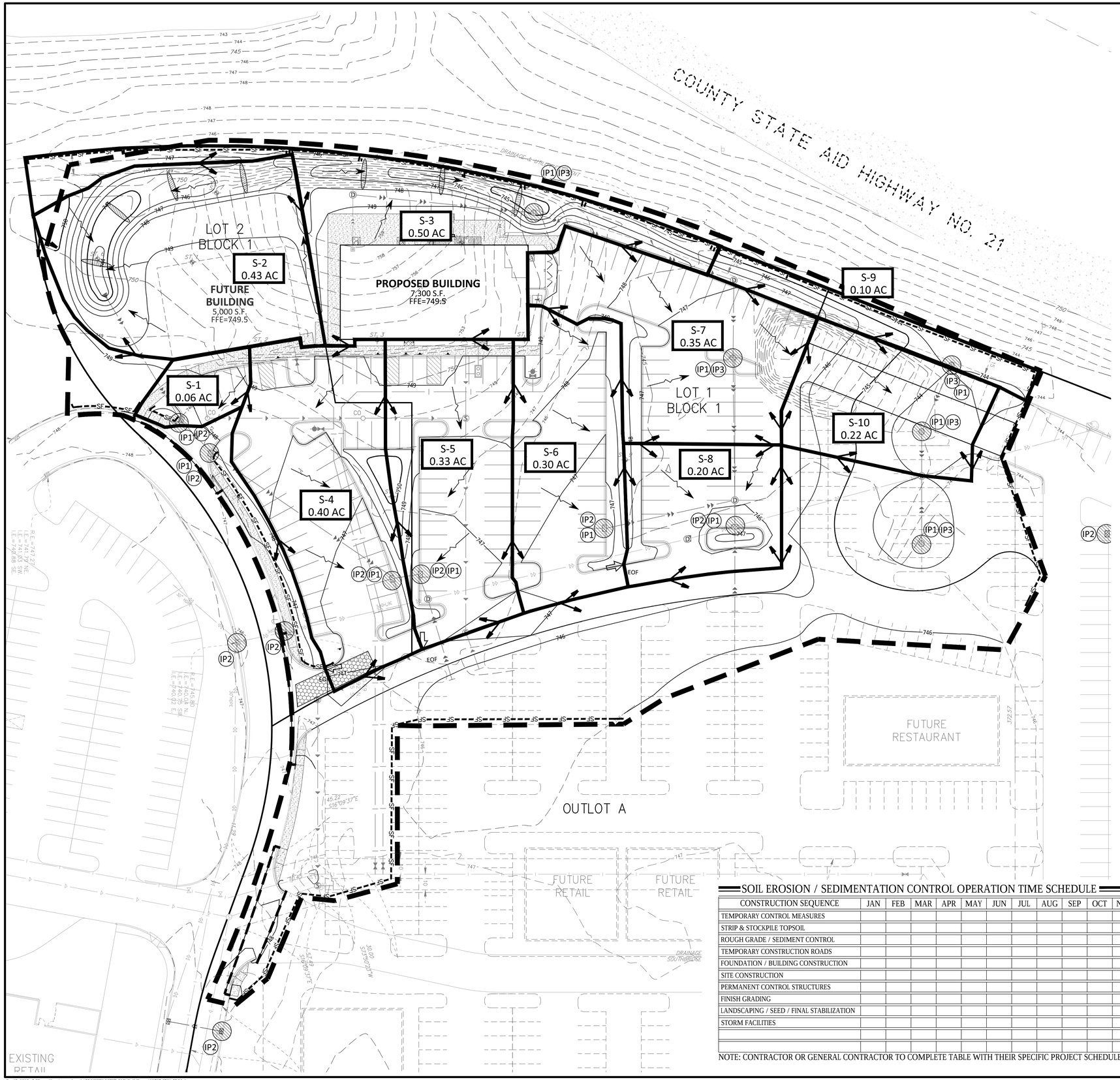

LEGEND

	PROPOSED	EXISTING
CURB & GUTTER		
STORM SEWER		
DRAINTILE		
CONTOUR	902	902
RIP RAP		
OVERFLOW ELEV.	EOF 902.5	
SILT FENCE	SF SF	
SILT DIKE	SD SD	
LIMITS OF DISTURBANCE		
SOIL BORINGS		ST. 5
DIRECTION OF OVERLAND FLOW		
TEMPORARY DIVERSION DITCH		
CHECK DAM		
LIMITS OF DRAINAGE SUB-BASIN		
BIO-ROLL		
INLET PROTECTION DEVICE 1	IP-1	
INLET PROTECTION DEVICE 2	IP-2	
INLET PROTECTION DEVICE 3	IP-3	
TEMPORARY STONE CONSTRUCTION ENTRANCE		
TEMPORARY SEDIMENT BASIN	SB	
TEMPORARY STORAGE AND PARKING AREA	TS	
TEMPORARY STABILIZATION MEASURES (SEED, MULCH, MATS OR BLANKETS AS OUTLINED IN THE SWPPP)	TSM	

NOTE TO CONTRACTOR

THE EROSION CONTROL PLAN SHEETS ALONG WITH THE REST OF THE SWPPP MUST BE KEPT ONSITE UNTIL THE NOTICE OF TERMINATION IS FILED WITH THE MPCA, THE CONTRACTOR MUST UPDATE THE SWPPP, INCLUDING THE EROSION CONTROL PLAN SHEETS AS NECESSARY TO INCLUDE ADDITIONAL REQUIREMENTS, SUCH AS ADDITIONAL OR MODIFIED BMPS DESIGNED TO CORRECT PROBLEMS IDENTIFIED. AFTER FILING THE NOTICE OF TERMINATION, THE SWPPP, INCLUDING THE EROSION CONTROL PLAN SHEETS, AND ALL REVISIONS TO IT MUST BE SUBMITTED TO THE OWNER, TO BE KEPT ON FILE IN ACCORDANCE WITH THE RECORD RETENTION REQUIREMENTS DESCRIBED IN THE SWPPP NARRATIVE.

EROSION CONTROL MATERIALS QUANTITIES

ITEM	UNIT	QUANTITY
SILT FENCE	LINEAR FEET	1500
SILT DIKE	LINEAR FEET	0
BIO-ROLL	LINEAR FEET	140
CONSTRUCTION ENTRANCE	UNIT	1
INLET PROTECTION DEVICE (IP-1)	UNIT	11
INLET PROTECTION DEVICE (IP-2)	UNIT	10
INLET PROTECTION DEVICE (IP-3)	UNIT	5

* REFER TO SHEET C5.03 FOR GENERAL NOTES, MAINTENANCE NOTES, LOCATION MAPS, AND STANDARD DETAILS

THE SUBSURFACE UTILITY INFORMATION SHOWN ON THESE PLANS IS A UTILITY QUALITY LEVEL D. THIS QUALITY LEVEL WAS DETERMINED ACCORDING TO THE GUIDELINES OF ASCE/CI 38-02, TITLED "STANDARD GUIDELINES FOR THE COLLECTION AND DEPICTION OF EXISTING SUBSURFACE UTILITY DATA." THE CONTRACTOR AND/OR SUBCONTRACTORS SHALL DETERMINE THE EXACT LOCATION OF ALL EXISTING UTILITIES BEFORE COMMENCING WORK, BY CONTACTING THE NOTIFICATION CENTER (GOPHER STATE ONE FOR MINNESOTA). THE CONTRACTOR AND/OR SUBCONTRACTOR AGREE TO BE FULLY RESPONSIBLE FOR ANY AND ALL DAMAGES, WHICH MIGHT BE OCCASIONED BY HIS OR HER FAILURE TO EXACTLY LOCATE AND PRESERVE ANY AND ALL UTILITIES (UNDERGROUND AND OVERHEAD).

IF THE CONTRACTOR ENCOUNTERS ANY DRAIN TILE WITHIN THE SITE, HE OR SHE SHALL NOTIFY THE ENGINEER WITH THE LOCATION, SIZE, INVERT AND IF THE TILE LINE IS ACTIVE. NO DRAIN TILE SHALL BE BACKFILLED WITHOUT APPROVAL FROM THE PROJECT ENGINEER.

IT SHALL BE THE RESPONSIBILITY OF THE CONTRACTOR TO RELOCATE ALL EXISTING UTILITIES WHICH CONFLICT WITH THE PROPOSED IMPROVEMENTS SHOWN ON THE PLANS.

SOIL EROSION / SEDIMENTATION CONTROL OPERATION TIME SCHEDULE

CONSTRUCTION SEQUENCE	JAN	FEB	MAR	APR	MAY	JUN	JUL	AUG	SEP	OCT	NOV	DEC	JAN	FEB	MAR	APR	MAY	JUN
TEMPORARY CONTROL MEASURES																		
STRIP & STOCKPILE TOPSOIL																		
ROUGH GRADE / SEDIMENT CONTROL																		
TEMPORARY CONSTRUCTION ROADS																		
FOUNDATION / BUILDING CONSTRUCTION																		
SITE CONSTRUCTION																		
PERMANENT CONTROL STRUCTURES																		
FINISH GRADING																		
LANDSCAPING / SEED / FINAL STABILIZATION																		
STORM FACILITIES																		

NOTE: CONTRACTOR OR GENERAL CONTRACTOR TO COMPLETE TABLE WITH THEIR SPECIFIC PROJECT SCHEDULE

NORTH

0 30 60

SCALE IN FEET

Sambatek
www.sambatek.com
12800 Whitewater Drive, Suite 300
Minnetonka, MN 55343
763.476.6010 telephone
763.476.8532 facsimile
Engineering | Surveying | Planning | Environmental

Client

SHAKOPEE CROSSINGS LIMITED PARTNERSHIP

8170 CARRIAGE COURT NORTH
SUITE 210
SHAKOPEE, MN 55379

Project

SOUTHBRIDGE CROSSINGS EAST 5TH ADDITION

Location

SHAKOPEE, MN

Certification

I hereby certify that this plan, specification or report was prepared by me or under my direct supervision and that I am a duly licensed professional ENGINEER under the laws of the state of Minnesota.

George D. Abernathy
Registration No. 43505 Date: 10/19/2018

If applicable, contact us for a wet signed copy of this plan which is available upon request at Sambatek's, Minnetonka, MN office.

Summary

Designed: GDA Drawn: JMW
Approved: BDB Book / Page:
Phase: PERMIT Initial Issued: 10/19/2018

Revision History

No.	Date	By	Submittal / Revision
A	10/19/18	JMW	Building Revisions

Sheet Title

PHASE II EROSION CONTROL PLAN

Sheet No. Revision

C5.02 A

Project No. 20787

EROSION & SEDIMENTATION CONTROL NOTES & DETAILS / "SITE MAP"

SITE LOCATION MAP
NOT TO SCALE

USGS MAP
NOT TO SCALE

AREA SUMMARY IN ACRES

PAVEMENT AREA	мΨуп ! / ѕ
BUILDING AREA	лΨнс ! / ѕ
SEEDED AREA	нΨлт ! / ѕ
TOTAL DISTURBED	пΨмт ! / ѕ
PRE - CONSTRUCTION IMPERVIOUS	лΨлу ! / ѕ
POST - CONSTRUCTION IMPERVIOUS	нΨмм ! / ѕ

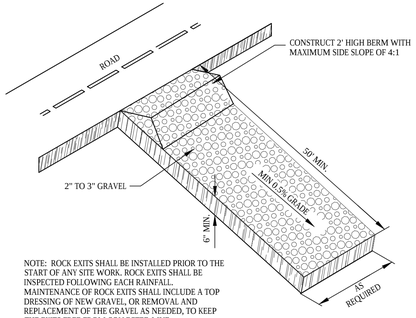

NOTE: ROCK EXITS SHALL BE INSTALLED PRIOR TO THE START OF ANY SITE WORK. ROCK EXITS SHALL BE INSPECTED FOLLOWING EACH RAINFALL. MAINTENANCE OF ROCK EXITS SHALL INCLUDE A TOP DRESSING OF NEW GRAVEL, OR REMOVAL AND REPLACEMENT OF THE GRAVEL AS NEEDED, TO KEEP THE EXITS FREE FROM COLLECTED MUD.

ROCK EXIT DRIVE
NOT TO SCALE

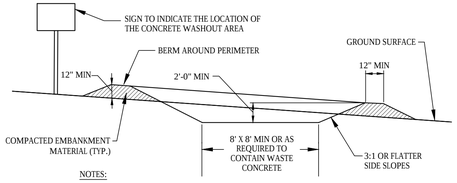

NOTES:

1. CONCRETE WASHOUT AREA SHALL BE INSTALLED PRIOR TO ANY CONCRETE PLACEMENT ON SITE.
2. CONCRETE WASHOUT AREA SHALL BE LINED WITH MINIMUM 10 MIL THICK PLASTIC LINER.
3. VEHICLE TRACKING CONTROL IS REQUIRED IF ACCESS TO CONCRETE WASHOUT AREA IS OFF PAVEMENT.
4. SIGNS SHALL BE PLACED AT THE CONSTRUCTION ENTRANCE, AT THE WASHOUT AREA, AND ELSEWHERE AS NECESSARY TO CLEARLY INDICATE THE LOCATION OF THE CONCRETE WASHOUT AREA TO OPERATORS OF CONCRETE TRUCKS AND PUMP RIGS.
5. THE CONCRETE WASHOUT AREA SHALL BE REPAIRED AND ENLARGED OR CLEANED OUT AS NECESSARY TO MAINTAIN CAPACITY FOR WASTED CONCRETE.
6. AT THE END OF CONSTRUCTION, ALL CONCRETE SHALL BE REMOVED FROM THE SITE AND DISPOSED OF AT AN ACCEPTED WASTE SITE.
7. WHEN THE CONCRETE WASHOUT AREA IS REMOVED, THE DISTURBED AREA SHALL BE SEEDED AND MULCHED OR OTHERWISE STABILIZED IN A MANNER ACCEPTED BY THE CITY.

CONCRETE WASHOUT AREA
NOT TO SCALE

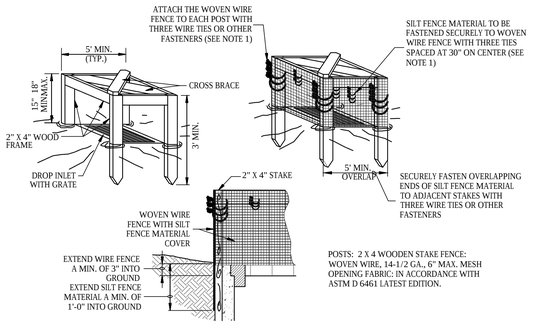

POSTS: 2 X 4 WOODEN STAKE FENCE: WOVEN WIRE, 14-1/2 GA., 6" MAX. MESH OPENING FABRIC: IN ACCORDANCE WITH ASTM D 6461 LATEST EDITION.

1. ATTACH THE WOVEN WIRE FENCE TO EACH POST AND THE GEOTEXTILE TO THE WOVEN WIRE FENCE (SPACED EVERY 30") WITH THREE WIRE TIES OR OTHER FASTENERS, ALL SPACED WITHIN THE TOP 8" OF THE FABRIC. ATTACH EACH TIE DIAGONALLY 45 DEGREES THROUGH THE FABRIC, WITH EACH PUNCTURE AT LEAST 1" VERTICALLY APART.
2. WHEN TWO SECTIONS OF SILT FENCE MATERIAL ADJOIN EACH OTHER, THEY SHALL BE OVERLAPPED ACROSS TWO POSTS.
3. MAINTENANCE SHALL BE PERFORMED AS NOTED IN THE SWPPP. DEPTH OF ACCUMULATED SEDIMENTS MAY NOT EXCEED ONE-HALF THE HEIGHT OF THE FABRIC. MAINTENANCE CLEANOUT MUST BE CONDUCTED REGULARLY TO PREVENT ACCUMULATED SEDIMENTS FROM REACHING ONE-HALF THE HEIGHT OF THE SILT FENCE MATERIAL ABOVE GRADE.
4. ALL SILT FENCE INLETS SHALL INCLUDE WIRE SUPPORT.

SILT FENCE INLET PROTECTION (IP-1)
NOT TO SCALE

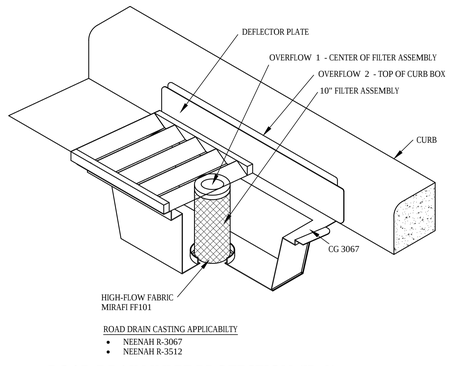

ROAD DRAIN CASTING APPLICABILITY

- NEENAH R-3067
- NEENAH R-3512

ROAD DRAIN INLET PROTECTION (IP-2)
NOT TO SCALE

DEVELOPER/OWNER SHAKOPEE CROSSINGS LIMITED PARTNERSHIP 8170 CARRIAGE COURT NORTH, SUITE 210 SHAKOPEE, MN 55379 TEL 952-465-3939 CONTACT: STEVEN D. SOLTAU
SITE OPERATOR / GENERAL CONTRACTOR
SUPERINTENDENT:

SEQUENCE OF CONSTRUCTION

PHASE I:

1. INSTALL STABILIZED CONSTRUCTION ENTRANCES.
2. PREPARE TEMPORARY PARKING AND STORAGE AREA.
3. CONSTRUCT THE SILT FENCES ON THE SITE.
4. INSTALL INLET PROTECTION DEVICES AS SHOWN ON THE PLANS.
5. CLEAR AND GRUB THE SITE.
6. BEGIN GRADING THE SITE.
7. START CONSTRUCTION OF BUILDING PAD AND STRUCTURES.

PHASE II:

1. TEMPORARILY SEED DENUDED AREAS.
2. INSTALL UTILITIES, UNDERDRAINS, STORM SEWERS, CURBS AND GUTTERS.
3. INSTALL RIP RAP AROUND OUTLET STRUCTURES.
4. INSTALL INLET PROTECTION AROUND ALL STORM SEWER STRUCTURES.
5. PREPARE SITE FOR PAVING.
6. PAVE SITE.
7. INSTALL INLET PROTECTION DEVICES.
8. COMPLETE GRADING AND INSTALL PERMANENT SEEDING AND PLANTING.
9. REMOVE ALL TEMPORARY EROSION AND SEDIMENT CONTROL DEVICES (ONLY IF SITE IS STABILIZED), IF REQUIRED BY THE CONTRACT

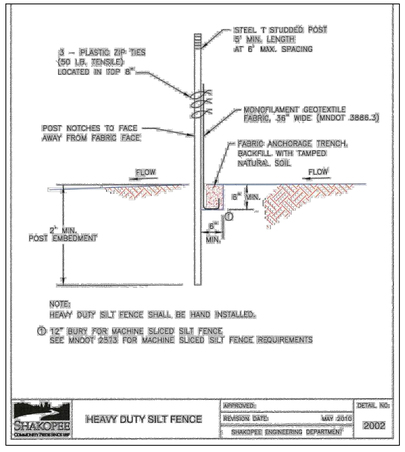

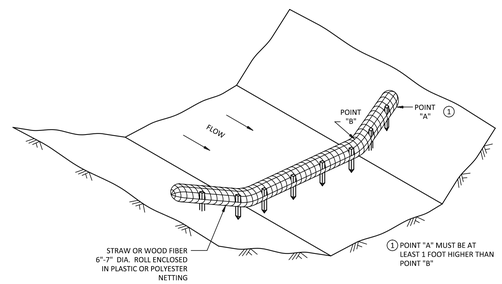

BIO-ROLLS
NOT TO SCALE

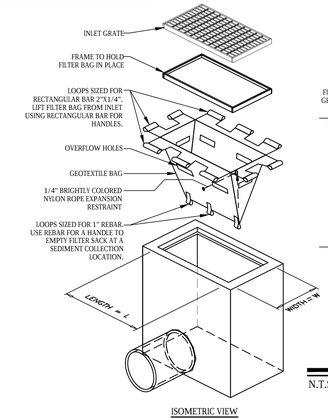

ISOMETRIC VIEW

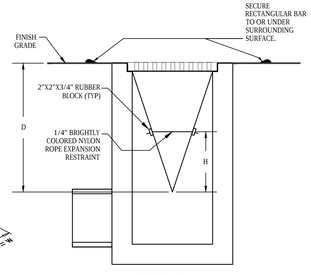

SECTION VIEW
(FILTER SACK INSTALLED)

NOTES:

1. GEOTEXTILE SHALL BE A WOVEN POLYPROPYLENE FABRIC THAT MEETS OR EXCEEDS REQUIREMENTS IN THE SPECIFICATIONS TABLE.
2. PLACE AN OIL ABSORBENT PAD OR PILLOW OVER INLET GRATE WHEN OIL SPILLS ARE A CONCERN.
3. THE WIDTH, "W", OF THE FILTER SACK SHALL MATCH THE INSIDE WIDTH OF THE GRATED INLET BOX.
4. THE DEPTH, "D", OF THE FILTER SACK SHALL BE BETWEEN 18 INCHES AND 36 INCHES.
5. THE LENGTH, "L", OF THE FILTER SACK SHALL MATCH THE INSIDE LENGTH OF THE GRATED INLET BOX.

MAINTENANCE NOTES:

1. INLET PROTECTION DEVICES MUST BE INSPECTED FOR SEDIMENT ACCUMULATION WITHIN THE CATCH BASIN. REMOVE TRAPPED SEDIMENT WHEN BRIGHTLY COLORED EXPANSION RESTRAINT CAN NO LONGER BE SEEN.
2. REMOVAL OF SEDIMENT ACCUMULATED IN OR ADJACENT TO A STORM DRAIN INLET MUST BEGIN IMMEDIATELY UPON DISCOVERY, WITH COMPLETION OF THE ACTIVITY OCCURRING NO LATER THAN THE END OF THE FOLLOWING BUSINESS DAY.
3. INLET PROTECTION DEVICES SHALL BE INSPECTED FOR UNINTENDED BYPASS OR IMPROPER FLOW-RATES THAT MAY CAUSE DOWNSTREAM FLOODING.
4. CONTACT THE CEC FOR ALTERNATE INLET PROTECTION IF THE DESIGNED PROTECTION MAY IMPACT DOWNSTREAM BMPS, ADJACENT SLOPES, ETC., DUE TO PONDING ISSUES. ENSURE THAT NO UNDERMINING OF INLET PROTECTION DEVICES HAS OCCURRED.
5. INLET PROTECTION DEVICES AND BARRIERS SHALL BE REPAIRED OR REPLACED IF THEY SHOW SIGNS OF UNDERMINING OR DETERIORATION.

INLET PROTECTION FILTER SACK (IP-3)
N.T.S.

FOR USE ONLY IN PAVED AREAS WHERE SEDIMENT LOADS ARE EXPECTED TO BE VERY LOW. FILTER SACK MUST HAVE OVERFLOW HOLES TO PREVENT PONDING.

GENERAL EROSION NOTES:

1. CONSTRUCTION SHALL COMPLY WITH ALL APPLICABLE GOVERNING CODES AND BE CONSTRUCTED TO SAME. WHERE A CONFLICT EXISTS BETWEEN LOCAL JURISDICTIONAL STANDARD SPECIFICATIONS AND SAMBATEK STANDARD SPECIFICATIONS, THE MORE STRINGENT SPECIFICATION SHALL APPLY.
2. THE STORMWATER POLLUTION PREVENTION PLAN (SWPPP) IS COMPRISED OF THIS DRAWING (EROSION & SEDIMENTATION CONTROL PLAN-ESC PLAN), THE STANDARD DETAILS, THE PLAN NARRATIVE, AND ITS APPENDICES, PLUS THE PERMIT AND ALL SUBSEQUENT REPORTS AND RELATED DOCUMENTS.
3. CONTRACTOR SHALL BE RESPONSIBLE FOR COMPLETING & SUBMITTING THE APPLICATION FOR THE MPCA GENERAL STORMWATER PERMIT FOR CONSTRUCTION ACTIVITY. ALL CONTRACTORS AND SUBCONTRACTORS INVOLVED WITH STORM WATER POLLUTION PREVENTION SHALL OBTAIN A COPY OF THE SWPPP AND THE STATE OF MINNESOTA NATIONAL POLLUTANT DISCHARGE ELIMINATION SYSTEM GENERAL PERMIT (NPDES PERMIT) AND BECOME FAMILIAR WITH THE CONTENTS. THE SWPPP AND ALL OTHER RELATED DOCUMENTS MUST BE KEPT AT THE SITE DURING CONSTRUCTION.
4. CONTRACTOR SHALL IMPLEMENT BEST MANAGEMENT PRACTICES (BMP'S) AS REQUIRED BY THE SWPPP & PERMITS. CONTRACTOR SHALL OVERSEE THE INSPECTION & MAINTENANCE OF THE BMP'S AND EROSION PREVENTION FROM BEGINNING OF CONSTRUCTION AND UNTIL CONSTRUCTION IS COMPLETED, IS APPROVED BY ALL AUTHORITIES, AND THE NOTICE OF TERMINATION (NOT) HAS BEEN FILED WITH THE MPCA BY EITHER THE OWNER OR OPERATOR AS APPROVED ON PERMIT. ADDITIONAL BMP'S SHALL BE IMPLEMENTED AS DICTATED BY CONDITIONS AT NO ADDITIONAL COST TO OWNER THROUGHOUT ALL PHASES OF CONSTRUCTION.
5. CONTRACTOR SHALL COMPLY WITH TRAINING REQUIREMENTS IN PART III.A.2 OF THE GENERAL PERMIT.
6. BMP'S AND CONTROLS SHALL CONFORM TO FEDERAL, STATE, OR LOCAL REQUIREMENTS OR MANUAL OF PRACTICE, AS APPLICABLE. CONTRACTOR SHALL IMPLEMENT ADDITIONAL CONTROLS AS DIRECTED BY PERMITTING AGENCY OR OWNER.
7. ESC PLAN MUST CLEARLY DELINEATE ALL STATE WATERS. PERMITS FOR ANY CONSTRUCTION ACTIVITY IMPACTING STATE WATERS OR REGULATED WETLANDS MUST BE MAINTAINED ON SITE AT ALL TIMES.
8. CONTRACTOR SHALL MINIMIZE CLEARING TO THE MAXIMUM EXTENT PRACTICAL OR AS REQUIRED BY THE GENERAL PERMIT. THE BOUNDARIES OF THE CLEARING LIMITS SHOWN ON THE ESC PLANS SHALL BE CLEARLY DELINEATED (E.G. WITH FLAGS, STAKES, SIGNS, SILT FENCE, ETC.) ON THE DEVELOPMENT SITE BEFORE WORK BEGINS. GROUND DISTURBING ACTIVITIES MUST NOT OCCUR OUTSIDE THE LIMITS OF DISTURBANCE.
9. GENERAL CONTRACTOR SHALL DENOTE ON PLAN THE TEMPORARY PARKING AND STORAGE AREA WHICH SHALL ALSO BE USED AS THE EQUIPMENT MAINTENANCE AND CLEANING AREA, EMPLOYEE PARKING AREA, AND AREA FOR LOCATING PORTABLE FACILITIES, OFFICE TRAILERS, AND TOILET FACILITIES.
10. ALL WASH WATER (CONCRETE TRUCKS, VEHICLE CLEANING, EQUIPMENT CLEANING, ETC.) MUST BE LIMITED TO A DEFINED AREA OF THE SITE AND SHALL BE CONTAINED AND PROPERLY TREATED OR DISPOSED. NO ENGINE DEGREASING IS ALLOWED ON SITE.
11. ALL LIQUID AND SOLID WASTES GENERATED BY CONCRETE WASHOUT OPERATIONS MUST BE CONTAINED IN A LEAK-PROOF CONTAINMENT FACILITY OR IMPERMEABLE LINER. A COMPACTED CLAY LINER IS NOT ACCEPTABLE. THE LIQUID AND SOLID WASTES MUST NOT CONTACT THE GROUND, AND THERE MUST NOT BE RUNOFF FROM THE CONCRETE WASHOUT OPERATIONS OR AREAS. LIQUID AND SOLID WASTES MUST BE DISPOSED OF PROPERLY AND IN COMPLIANCE WITH MPCA REGULATIONS. A SIGN MUST BE INSTALLED ADJACENT TO EACH WASHOUT FACILITY TO INFORM CONCRETE EQUIPMENT OPERATORS TO UTILIZE THE PROPER FACILITIES. SELF-CONTAINED CONCRETE WASHOUTS ON CONCRETE DELIVERY TRUCKS ARE ALLOWED.
12. SUFFICIENT OIL AND GREASE ABSORBING MATERIALS AND FLOTATION BOOMS SHALL BE MAINTAINED ON SITE OR READILY AVAILABLE TO CONTAIN AND CLEAN-UP FUEL OR CHEMICAL SPILLS AND LEAKS.
13. DUST ON THE SITE SHALL BE CONTROLLED. THE USE OF MOTOR OILS AND OTHER PETROLEUM BASED OR TOXIC LIQUIDS FOR DUST SUPPRESSION OPERATIONS IS PROHIBITED.
14. SOLID WASTE: COLLECTED SEDIMENT, ASPHALT & CONCRETE MILLINGS, FLOATING DEBRIS, PAPER, PLASTIC, FABRIC, CONSTRUCTION & DEMOLITION DEBRIS & OTHER WASTES MUST BE DISPOSED OF PROPERLY & MUST COMPLY WITH MPCA DISPOSAL REQUIREMENTS.
15. HAZARDOUS MATERIALS: OIL, GASOLINE, PAINT & ANY HAZARDOUS SUBSTANCES MUST BE PROPERLY STORED, INCLUDING SECONDARY CONTAINMENT, TO PREVENT SPILLS, LEAKS OR OTHER DISCHARGE. RESTRICTED ACCESS TO STORAGE AREAS MUST BE PROVIDED TO PREVENT VANDALISM. STORAGE & DISPOSAL OF HAZARDOUS WASTE MUST BE IN COMPLIANCE WITH MPCA REGULATIONS.
16. ALL STORM WATER POLLUTION PREVENTION MEASURES PRESENTED ON THIS PLAN, AND IN THE SWPPP, SHALL BE INITIATED AS SOON AS PRACTICABLE AND PRIOR TO SOIL DISTURBING ACTIVITIES UPSLOPE.
17. DISTURBED PORTIONS OF THE SITE WHERE CONSTRUCTION ACTIVITY HAS STOPPED SHALL BE TEMPORARILY SEEDED, WITHIN 14 DAYS OF INACTIVITY. SEEDING SHALL BE IN ACCORDANCE WITH MN/DOT SEED MIXTURE NUMBER 21-111 OR 21-112 DEPENDING ON THE SEASON OF PLANTING (SEE MN/DOT SPECIFICATION SECTION 2575.3) SEEDING METHOD AND APPLICATION RATE SHALL CONFORM TO MN/DOT SPECIFICATION SECTION 2575.3. TEMPORARY MULCH SHALL BE APPLIED IN ACCORDANCE WITH MN/DOT SPECIFICATION SECTION 2575.3F1 AND 2575.3G. ALTERNATIVELY, HYDRAULIC SOIL STABILIZER IN ACCORDANCE WITH MN/DOT SPECIFICATION SECTION 2575.3H MAY BE USED IN PLACE OF TEMPORARY MULCH.
18. DISTURBED PORTIONS OF THE SITE WHERE CONSTRUCTION ACTIVITY HAS PERMANENTLY STOPPED SHALL BE PERMANENTLY STABILIZED. THESE AREAS SHALL BE STABILIZED IN ACCORDANCE WITH THE TIME TABLE DESCRIBED ABOVE. REFER TO THE GRADING PLAN AND/OR LANDSCAPE PLAN FOR VEGETATIVE COVER.
19. CONTRACTORS OR SUBCONTRACTORS WILL BE RESPONSIBLE FOR REMOVING SEDIMENT FROM CONVEYANCES & FROM TEMPORARY SEDIMENTATION BASINS THAT ARE TO BE USED AS PERMANENT WATER QUALITY MANAGEMENT BASINS. SEDIMENT MUST BE STABILIZED TO PREVENT IT FROM BEING WASHED BACK INTO THE BASIN, CONVEYANCES, OR DRAINAGEWAYS DISCHARGING OFF-SITE OR TO SURFACE WATERS. THE CLEANOUT OF PERMANENT BASINS MUST BE SUFFICIENT TO RETURN THE BASIN TO DESIGN CAPACITY.
20. ON-SITE & OFF-SITE SOIL STOCKPILE AND BORROW AREAS SHALL BE PROTECTED FROM EROSION AND SEDIMENTATION THROUGH IMPLEMENTATION OF BMP'S. STOCKPILE AND BORROW AREA LOCATIONS SHALL BE NOTED ON THE SITE MAP AND PERMITTED IN ACCORDANCE WITH GENERAL PERMIT REQUIREMENTS.
21. TEMPORARY SOIL STOCKPILES MUST HAVE SILT FENCE OR OTHER EFFECTIVE SEDIMENT CONTROLS & CANNOT BE PLACED IN SURFACE WATERS, INCLUDING STORMWATER CONVEYANCES SUCH AS CURB & GUTTER SYSTEMS OR CONDUITS & DITCHES.
22. SLOPES SHALL BE LEFT IN A ROUGHENED CONDITION DURING THE GRADING PHASE TO REDUCE RUNOFF VELOCITIES AND EROSION.
23. DUE TO THE GRADE CHANGES DURING THE DEVELOPMENT OF THE PROJECT, CONTRACTOR SHALL BE RESPONSIBLE FOR ADJUSTING THE EROSION CONTROL MEASURES (SILT FENCES, CHECK DAMS, INLET PROTECTION DEVICES, ETC.) TO PREVENT EROSION.
24. ALL CONSTRUCTION SHALL BE STABILIZED AT THE END OF EACH WORKING DAY, THIS INCLUDES BACKFILLING OF TRENCHES FOR UTILITY CONSTRUCTION AND PLACEMENT OF GRAVEL OR BITUMINOUS PAVING FOR ROAD CONSTRUCTION.

MAINTENANCE NOTES:

ALL MEASURES STATED ON THIS EROSION AND SEDIMENT CONTROL PLAN, AND IN THE STORM WATER POLLUTION PREVENTION PLAN SHALL BE MAINTAINED IN FULLY FUNCTIONAL CONDITION UNTIL NO LONGER REQUIRED FOR A COMPLETED PHASE OF WORK OR FINAL STABILIZATION OF THE SITE. THE DESIGNATED CONTACT PERSON NOTED ON THIS PLAN MUST ROUTINELY INSPECT THE CONSTRUCTION ON SITE ONCE EVERY SEVEN DAYS DURING ACTIVE CONSTRUCTION AND WITHIN 24 HOURS AFTER A RAINFALL EVENT GREATER THAN 0.5 INCHES IN 24 HOURS. ALL EROSION AND SEDIMENTATION CONTROL MEASURES SHALL BE CLEANED AND REPAIRED IN ACCORDANCE WITH THE FOLLOWING:

1. ALL SILT FENCES MUST BE REPAIRED, REPLACED, OR SUPPLEMENTED WHEN THEY BECOME NONFUNCTIONAL OR THE SEDIMENT REACHES 1/3 OF THE HEIGHT OF THE FENCE. THESE REPAIRS MUST BE MADE WITHIN 24 HOURS OF DISCOVERY, OR AS SOON AS FIELD CONDITIONS ALLOW ACCESS.
2. TEMPORARY AND PERMANENT SEDIMENTATION BASINS MUST BE DRAINED AND THE SEDIMENT REMOVED WHEN THE DEPTH OF SEDIMENT COLLECTED IN THE BASIN REACHES 1/2 THE STORAGE VOLUME. DRAINAGE AND REMOVAL MUST BE COMPLETED WITHIN 72 HOURS OF DISCOVERY, OR AS SOON AS FIELD CONDITIONS ALLOW ACCESS (SEE PART IV.D. OF THE GENERAL PERMIT).
3. SURFACE WATERS, INCLUDING DRAINAGE DITCHES AND CONVEYANCE SYSTEMS, MUST BE INSPECTED FOR EVIDENCE OF SEDIMENT BEING DEPOSITED BY EROSION. CONTRACTOR MUST REMOVE ALL DELTAS AND SEDIMENT DEPOSITED IN SURFACE WATERS, INCLUDING DRAINAGE WAYS, CATCH BASINS, AND OTHER DRAINAGE SYSTEMS, AND RESTABILIZE THE AREAS WHERE SEDIMENT REMOVAL RESULTS IN EXPOSED SOIL. THE REMOVAL AND STABILIZATION MUST TAKE PLACE WITHIN SEVEN (7) DAYS OF DISCOVERY UNLESS PRECLUDED BY LEGAL, REGULATORY, OR PHYSICAL ACCESS CONSTRAINTS. CONTRACTOR SHALL USE ALL REASONABLE EFFORTS TO OBTAIN ACCESS. IF PRECLUDED, REMOVAL AND STABILIZATION MUST TAKE PLACE WITHIN SEVEN (7) CALENDAR DAYS OF OBTAINING ACCESS. CONTRACTOR IS RESPONSIBLE FOR CONTACTING ALL LOCAL, REGIONAL, STATE AND FEDERAL AUTHORITIES AND RECEIVING ANY APPLICABLE PERMITS, PRIOR TO CONDUCTING ANY WORK.
4. CONSTRUCTION SITE VEHICLE EXIT LOCATIONS MUST BE INSPECTED FOR EVIDENCE OF OFF-SITE SEDIMENT TRACKING ONTO PAVED SURFACES. TRACKED SEDIMENT MUST BE REMOVED FROM ALL OFF-SITE PAVED SURFACES, WITHIN 24 HOURS OF DISCOVERY, OR IF APPLICABLE, WITHIN A SHORTER TIME TO COMPLY WITH PART IV.C.6 OF THE GENERAL PERMIT.
5. CONTRACTOR IS RESPONSIBLE FOR THE OPERATION AND MAINTENANCE OF TEMPORARY AND PERMANENT WATER QUALITY MANAGEMENT BMPS, AS WELL AS ALL EROSION PREVENTION AND SEDIMENT CONTROL BMPS, FOR THE DURATION OF THE CONSTRUCTION WORK AT THE SITE. THE PERMITTEE(S) ARE RESPONSIBLE UNTIL ANOTHER PERMITTEE HAS ASSUMED CONTROL (ACCORDING TO PART II.B.5 OF THE MPCA GENERAL PERMIT) OVER ALL AREAS OF THE SITE THAT HAVE NOT BEEN FINALLY STABILIZED OR THE SITE HAS UNDERGONE FINAL STABILIZATION, AND A (N.O.T.) HAS BEEN SUBMITTED TO THE MPCA.
6. IF SEDIMENT ESCAPES THE CONSTRUCTION SITE, OFF-SITE ACCUMULATIONS OF SEDIMENT MUST BE REMOVED IN A MANNER AND AT A FREQUENCY SUFFICIENT TO MINIMIZE OFF-SITE IMPACTS (E.G., FUGITIVE SEDIMENT IN STREETS COULD BE WASHED INTO STORM SEWERS BY THE NEXT RAIN AND/OR POSE A SAFETY HAZARD TO USERS OF PUBLIC STREETS).
7. ALL INFILTRATION AREAS MUST BE INSPECTED TO ENSURE THAT NO SEDIMENT FROM ONGOING CONSTRUCTION ACTIVITIES IS REACHING THE INFILTRATION AREA AND THESE AREAS ARE PROTECTED FROM COMPACTION DUE TO CONSTRUCTION EQUIPMENT DRIVING ACROSS THE INFILTRATION AREA.

Sambatek
www.sambatek.com
12800 Whitewater Drive, Suite 300
Minnetonka, MN 55343
763.476.6010 telephone
763.476.8532 facsimile
Engineering | Surveying | Planning | Environmental

Client
SHAKOPEE CROSSINGS LIMITED PARTNERSHIP
8170 CARRIAGE COURT NORTH
SUITE 210
SHAKOPEE, MN 55379

Project
SOUTHBRIDGE CROSSINGS EAST 5TH ADDITION

Location
SHAKOPEE, MN

Certification

I hereby certify that this plan, specification or report was prepared by me or under my direct supervision and that I am a duly licensed professional ENGINEER under the laws of the state of Minnesota.

George D. Abernathy
Registration No. 43505 Date: 10/19/2018

If applicable, contact us for a wet signed copy of this plan which is available upon request at Sambatek's, Minnetonka, MN office.

Summary

Designed: GDA Drawn: JMW
Approved: BDB Book / Page:
Phase: PERMIT Initial Issued: 10/19/2018

Revision History

No.	Date	By	Submittal / Revision
A	10/19/18	JMW	Building Revisions

Sheet Title
EROSION CONTROL NOTES & DETAILS

Sheet No. Revision
C5.03 A

Project No. 20787

SECTION 1: SITE EVALUATION, ASSESSMENT, AND PLANNING

1.1 PROJECT/SITE INFORMATION

PROJECT/SITE NAME SOUTHBRIDGE CROSSINGS EAST 5TH ADDITION
PROJECT STREET/LOCATION EAST QUADRANT OF HWY 21 AND HWY 18
CITY: SHAKOPEE
STATE: MINNESOTA
ZIP CODE: 55379
COUNTY: SCOTT COUNTY
[!¢l¢¦59Ÿ bлппс пс¶ нфђ
[hbDl¢¦59Ÿ ² лфос нп¶ птђ

THE PROPOSED PROJECT CONSISTS OF A 6500 SF RESTAURANT 5000 SF BUILDING TBD, AND ITS ASSOCIATED PARKING. THE SITE IS LOCATED WITHIN AN OVERALL DEVELOPMENT OF COMMERCIAL TO THE EAST AND SOUTH. THE MPCA'S REQUIREMENT FOR VOLUME REDUCTION WILL BE MET ON-SITE THROUGH THE USE OF INFILTRATION BASINS. A REGIONAL STORMWATER MANAGEMENT SYSTEM IS IN PLACE FOR WATER QUALITY AND RATE CONTROL.

NPDES PERMIT NUMBER: TBD

1.2 CONTACT INFORMATION/RESPONSIBLE PARTIES

COMPANY/ORGANIZATION NAME: SHAKOPEE CROSSINGS LIMITED PARTNERSHIP
CONTACT NAME: STEVEN D. SOLTAU
ADDRESS: 8170 CARRIAGE COURT NORTH, SUITE 210
CITY, STATE, ZIP CODE: SHAKOPEE, MN 55379
TELEPHONE NUMBER: 952-465-3939
FAX/EMAIL:

GENERAL CONTRACTOR (TO BE COMPLETED BY GENERAL CONTRACTOR):
COMPANY/ORGANIZATION NAME:
CONTACT NAME:
ADDRESS:
CITY, STATE, ZIP CODE:
TELEPHONE NUMBER:
FAX/EMAIL:
INSERT AREA OF CONTROL (IF MORE THAN ONE OPERATOR AT SITE):

THE GENERAL CONTRACTOR SHALL COMPLY WITH THE REQUIREMENTS OF THE MINNESOTA GENERAL PERMIT AUTHORIZATION TO DISCHARGE STORM WATER ASSOCIATED WITH CONSTRUCTION ACTIVITY UNDER THE NATIONAL POLLUTION DISCHARGE ELIMINATION SYSTEM/STATE DISPOSAL SYSTEM PERMIT PROGRAM (GENERAL PERMIT). THE GENERAL CONTRACTOR MUST COMPLY WITH ANY LOCAL GOVERNING AGENCY (LGU) HAVING JURISDICTION CONCERNING EROSION AND SEDIMENT CONTROL. THE GENERAL CONTRACTOR SHALL BE REQUIRED TO BE A CO-APPLICANT WITH THE OWNER. THE GENERAL CONTRACTOR SHALL BE RESPONSIBLE FOR MAINTENANCE OF THE EROSION AND SEDIMENT CONTROL DEVICES. ¢I9 ά!tt[l/!¢lhb Chw D9b9w![{¢hwaπ² !¢9w t9wal¢ Chw /hb{¢w¦/¢lhb !/¢l±l¢¸ όab wмлллмύέ {I![[.9 /hat[9¢95 .¸ ¢I9 D9b9w![/hb¢w!/¢hw !b5 {¦. al¢¢95 hb[lb9Ɫ ALONG WITH THE REQUIRED APPLICATION FEE, THROUGH THE MPCA'S WEBSITE.

UNLESS NOTIFIED BY THE MINNESOTA POLLUTION CONTROL AGENCY (MPCA) TO THE CONTRARY, APPLICANTS WHO SUBMIT A COMPLETE APPLICATION FORM IN ACCORDANCE WITH THE REQUIREMENTS OF THE GENERAL PERMIT ARE AUTHORIZED TO DISCHARGE STORM WATER FROM THE CONSTRUCTION SITE UNDER THE TERMS AND CONDITIONS OF THIS PERMIT SEVEN (7) CALENDAR DAYS THE ONLINE APPLICATION PROCESS IS COMPLETE(HTTPS://NETWEB.PCA.STATE.MN.US/PRIVATE/).

(NOTE: ALL PROJECTS UNDER 50 ACRES MUST SUBMIT THE PERMIT APPLICATION USING THE ONLINE PROCESS. MAILED APPLICATIONS ARE ONLY ACCEPTED FOR PROJECTS THAT DISTURB 50 OR MORE ACRES, AND HAVE A DISCHARGE POINT WITHIN 1 MILE OF A PROTECTED WATER.)

ADDITIONALLY, AUTHORIZATION WILL BE DELAYED UNDER THE FOLLOWING CIRCUMSTANCES:

- IF THE PROJECT DISTURBS 50 ACRES OR MORE AND HAS A DISCHARGE POINT WITHIN 1 MILE AND FLOWS TO AN IMPAIRED OR SPECIAL WATER WHOSE DISCHARGE MAY REACH AN IMPAIRED OR SPECIAL WATER LISTED IN APPENDIX A OF THE GENERAL PERMIT THE APPLICANT SHALL SUBMIT THE STORM WATER POLLUTION PREVENTION PLAN AND A COMPLETED APPLICATION AT LEAST 30 CALENDAR DAYS PRIOR TO THE COMMENCEMENT OF CONSTRUCTION ACTIVITIES. UNLESS NOTIFIED BY THE MPCA TO THE CONTRARY, COVERAGE BECOMES EFFECTIVE 30 CALENDAR DAYS AFTER THE POSTMARKED DATE OF THE COMPLETED APPLICATION.
- IF THE PROJECT INCLUDES ALTERNATIVE METHODS THE APPLICATION AND TWO ALTERNATIVE TREATMENT PLANS MUST BE SUBMITTED A MINIMUM OF 90 DAY BEFORE CONSTRUCTION STARTS.

EROSION & SEDIMENT CONTROL SUBCONTRACTOR (RESPONSIBLE FOR IMPLEMENTING & UPDATING SWPPP - TO BE COMPLETED BY CONTRACTOR):
COMPANY/ORGANIZATION NAME:
CONTACT NAME:
ADDRESS:
CITY, STATE, ZIP CODE:
TELEPHONE NUMBER:
FAX/EMAIL:

EROSION & SEDIMENT CONTROL INSPECTOR (SEE PART 6.1 OF THIS SWPPP FOR MORE INFORMATION ON INSPECTION RESPONSIBILITIES- TO BE COMPLETED BY CONTRACTOR):
COMPANY/ORGANIZATION NAME:
CONTACT NAME:
ADDRESS:
CITY, STATE, ZIP CODE:
TELEPHONE NUMBER:
FAX/EMAIL:

GROUND DISTURBING SUBCONTRACTOR(S):
COMPANY/ORGANIZATION NAME:
CONTACT NAME:
ADDRESS:
CITY, STATE, ZIP CODE:
TELEPHONE NUMBER:
FAX/EMAIL:

THE GENERAL CONTRACTOR SHALL PROVIDE A CHAIN OF RESPONSIBILITY WITH ALL OPERATORS ON THE SITE TO ENSURE THAT THE SWPPP WILL BE IMPLEMENTED AND STAY IN EFFECT UNTIL THE CONSTRUCTION PROJECT IS COMPLETE AND THE NOT SUBMITTED.

THIS SWPPP WAS PREPARED BY:
COMPANY/ORGANIZATION NAME: SAMBATEK
CONTACT NAME: GEORGE ABERNATHY
ADDRESS: 12800 WHITEWATER DRIVE, SUITE 300
CITY, STATE, ZIP CODE: MINNETONKA, MN 55343
TELEPHONE NUMBER: 763-476-6010
FAX/EMAIL: GABERNATHY@SAMBATEK.COM

1.3 NATURE OF CONSTRUCTION ACTIVITY

NATURE OF CONSTRUCTION:

THIS SWPPP HAS BEEN PREPARED FOR MAJOR ACTIVITIES ASSOCIATED WITH CONSTRUCTION OF SOUTHBRIDGE CROSSINGS EAST 5TH ADDITION. THE PROJECT IS LOCATED IN THE EAST QUADRANT OF HWY 21 AND HWY 18. THE LAND IS CURRENTLY UNDEVELOPED. SITE LIGHTING, LANDSCAPING AND UTILITY WORK WILL ALSO BE PERFORMED.

ANTICIPATED APPROXIMATE TIMELINES:
ESTIMATED PROJECT START DATE: 11/21/17
ESTIMATED PROJECT COMPLETION DATE: 11/21/18

1.4 SOILS, SLOPES, VEGETATION, AND CURRENT DRAINAGE PATTERNS

SOIL TYPE(S):
EXISTING SOILS CONSIST OF SANDY TO SILTY TYPE SOILS.
SLOPES:
THE MAJORITY OF THE SITE HAS GRADUAL SLOPES RANGING FROM 1-5% WITH STOCKPILES AND A TEMPORARY SEDIMENTATION BASIN.
DRAINAGE PATTERNS:
THE SITE FLOWS FROM SOUTH TO NORTH AND IS CONVEYED BY A STORM SEWER TO THE REGIONAL POND LOCATED NORTH OF THE SITE.
VEGETATION:
THE SITE IS SPARSELY VEGETATED WITH GRASS AND A SMALL NUMBER OF TREES.
RAINFALL INFORMATION:

RAINFALL INFORMATION - THE AVERAGE TOTAL ANNUAL PRECIPITATION IS ABOUT 28.32 INCHES. OF THIS ABOUT 17.31 INCHES, OR 61 PERCENT, USUALLY FALLS IN MAY THROUGH SEPTEMBER. THE AVERAGE ANNUAL SNOWFALL IS 57.3 INCHES.

1.5 CONSTRUCTION SITE ESTIMATES

PROJECT AREA SUMMARY:
TOTAL PROJECT AREA: 2.8 ACRES
CONSTRUCTION SITE AREA TO BE DISTURBED: 4.2 ACRES

IMPERVIOUS AREAS:
IMPERVIOUS AREA BEFORE CONSTRUCTION (ACRES): 0.08 ACRES
IMPERVIOUS AREA AFTER CONSTRUCTION (ACRES): 2.11 ACRES

1.6 RECEIVING WATERS

CONSTRUCTION PHASE STORM WATER SYSTEM DESCRIPTION:
EXISTING DRAINAGE PATHS WILL BE MAINTAINED DURING CONSTRUCTION. STORMWATER WILL BE HANDLED ONSITE THROUGH THE USE OF BMP'S SUCH AS SILT FENCE AND INLET PROTECTION. DOWNSTREAM RECEIVING WATERS ARE NOT ANTICIPATED TO BE AFFECTED BY THE PROJECT.

DESCRIPTION OF RECEIVING WATERS:
THERE ARE NO SPECIAL OR IMPAIRED WATERS WITHIN ONE MILE OF THE PROPOSED SITE. RUNOFF WILL BE DISCHARGED FROM THE PROPOSED SITE TO EXISTING STORM SEWER.

1.7 SITE FEATURES AND SENSITIVE AREAS TO BE PROTECTED

CARE IS TO BE TAKEN NOT TO DISTURB ANY PART OF THE SITE THAT IS NOT TO BE PART OF THE CONSTRUCTION EFFORTS.

1.8 POTENTIAL SOURCES OF POLLUTION

POTENTIAL SOURCES OF SEDIMENT AND OTHER POLLUTANTS TO STORMWATER RUNOFF:
CONSTRUCTION PHASE POLLUTANT SOURCES ANTICIPATED AT THE SITE ARE DISTURBED (BARE) SOIL, VEHICLE FUELS AND LUBRICANTS, CHEMICALS ASSOCIATED WITH BUILDING CONSTRUCTION, AND BUILDING MATERIALS. WITHOUT ADEQUATE CONTROL THERE IS THE POTENTIAL FOR EACH TYPE OF POLLUTANT TO BE TRANSPORTED BY STORM WATER.

1.9 ENDANGERED/THREATENED SPECIES

THERE ARE NO KNOWN THREATENED OR ENDANGERED SPECIES PRESENT ON SITE.

1.10 HISTORIC PRESERVATION

THERE ARE NO KNOWN HISTORIC SITES ON OR NEAR THE CONSTRUCTION SITE.

1.11 APPLICABLE FEDERAL, TRIBAL, STATE OR LOCAL PROGRAMS

LOCAL GOVERNING UNIT (LGU) REQUIREMENTS:
THE PROJECT FALLS UNDER THE STORMWATER MANAGEMENT REQUIREMENTS OF THE CITY OF SHAKOPEE AND THE MINNESOTA POLLUTION CONTROL AGENCY (MPCA). DUE TO THE PRESENCE OF CONTAMINATED SOILS, THE REQUIRED VOLUME ABSTRACTION OF 1-INCH OVER THE SITE'S IMPERVIOUS AREA IS PROHIBITED BY THE MPCA AND HAS BEEN WAIVED BY THE CITY OF SHAKOPEE. RATE CONTROL AND WATER QUALITY HAVE BEEN ACCOUNTED FOR AS PART OF AN OVERALL REGIONAL SYSTEM THAT HAS BEEN DEVELOPED AND IS IN PLACE.

1.12 MITIGATION MEASURES FROM ENVIRONMENTAL REVIEWS/TMDLS/IMPAIRED WATERS

THERE ARE NO ADDITIONAL REQUIREMENTS BASED ON MITIGATION MEASURES.

1.13 MAPS

EROSION AND SEDIMENT CONTROL PLANS:
(REVISE THE FOLLOWING AS NECESSARY)
THE FOLLOWING SITE DEVELOPMENT PLAN SHEETS ARE AN INTEGRAL PART OF THIS SWPPP:
C5.01 - PHASE I EROSION CONTROL PLAN
C5.02 - PHASE II EROSION CONTROL PLAN
C5.03 - EROSION CONTROL NOTES AND DETAILS

SECTION 2: EROSION AND SEDIMENT CONTROL BMPS

EROSION CONTROL BMPS:
THE PURPOSE OF EROSION CONTROL IS TO PREVENT SOIL PARTICLES FROM BECOMING SUSPENDED IN WATER AND BEING TRANSPORTED TO EITHER DOWNSTREAM SURFACE WATERS OR DOWNSTREAM PROPERTIES.

APPROPRIATE CONSTRUCTION PHASING, VEGETATIVE BUFFER STRIPS, HORIZONTAL SLOPE GRADING, AND OTHER CONSTRUCTION PRACTICES THAT MINIMIZE EROSION MUST BE PLANNED FOR AND IMPLEMENTED.

IN THE NATURAL CONDITION, SOIL IS STABILIZED BY NATIVE VEGETATION. THE PRIMARY TECHNIQUE TO BE USED AT THIS PROJECT FOR FINAL STABILIZATION OF SITE SOIL WILL BE TO PROVIDE A PROTECTIVE COVER OF VEGETATION, PAVEMENT, OR BUILDING.

ALL EXPOSED AREAS MUST BE STABILIZED AS SOON AS POSSIBLE (BUT NO LATER THAN THE NEXT WORK DAY) TO LIMIT SOIL EROSION, BUT IN NO CASE LATER THAN 14 DAYS AFTER THE CONSTRUCTION ACTIVITY IN THAT PORTION OF THE SITE HAS TEMPORARILY OR PERMANENTLY CEASED. TEMPORARY SOIL STOCKPILES WITHOUT SIGNIFICANT SILT, CLAY OR ORGANIC COMPONENTS (E.G. CLEAN AGGREGATED STOCKPILES, DEMOLITION CONCRETE STOCKPILES, SAND STOCKPILES) AND THE CONSTRUCTED BASE COMPONENTS OF ROADS, PARKING LOTS AND SIMILAR SURFACES ARE EXEMPT FROM THIS REQUIREMENT, BUT MUST COMPLY WITH SECTION 2.7 OF THIS SWPPP (PART IV.C.5 OF THE GENERAL PERMIT).

SEDIMENT CONTROL BMPS:
THE PURPOSE OF SEDIMENT CONTROL IS TO PREVENT SOIL PARTICLES THAT HAVE BEEN SUSPENDED IN WATER FROM ENTERING SURFACE WATERS, INCLUDING CURB AND GUTTER SYSTEMS AND STORM SEWER INLETS. SEDIMENT CONTROL BMPS HAVE BEEN DESIGNED AS PART OF THIS SWPPP.

IF THE DOWN GRADIENT TREATMENT SYSTEM IS OVERLOADED, THE CONTRACTOR IS RESPONSIBLE FOR IMPLEMENTING ADDITIONAL UP GRADIENT SEDIMENT CONTROL PRACTICES OR REDUNDANT BMPS TO ELIMINATE THE OVERLOADING AND MUST AMEND THE SWPPP TO IDENTIFY THE ADDITIONAL PRACTICES.

SEDIMENT CONTROL PRACTICES MUST ALWAYS BE ESTABLISHED ON ALL DOWN GRADIENT PERIMETERS AND BE LOCATED UPGRADIENT OF ANY BUFFER ZONES. THE PERIMETER SEDIMENT CONTROL PRACTICES MUST BE IN PLACE BEFORE ANY UP GRADIENT LAND DISTURBING ACTIVITIES BEGIN. THESE PRACTICES MUST REMAIN IN PLACE UNTIL FINAL STABILIZATION IS ACHIEVED (SEE SECTION 8 OF THIS SWPPP).

THE TIMING OF THE INSTALLATION OF SEDIMENT CONTROL PRACTICES MAY BE ADJUSTED TO ACCOMMODATE SHORT-TERM ACTIVITIES SUCH AS CLEARING OR GRUBBING, OR PASSAGE OF VEHICLES. ANY SHORT TERM ACTIVITY MUST BE COMPLETED AS QUICKLY AS POSSIBLE AND THE SEDIMENT CONTROL PRACTICES MUST BE RE-INSTALLED IMMEDIATELY AFTER THE ACTIVITY IS COMPLETED. SEDIMENT CONTROL PRACTICES MUST BE INSTALLED BEFORE THE NEXT RAIN EVENT EVEN IF THE ACTIVITY IS NOT COMPLETE.

2.1 MINIMIZE DISTURBED AREA AND PROTECT NATURAL FEATURES AND SOIL

IN ORDER TO MINIMIZE THE DISTURBED AREA ON SITE, SILT FENCE WILL BE UTILIZED AS A CONSTRUCTION AREA BOUNDARY. CONSTRUCTION IS TO BE PHASED IN SUCH A MANNER THAT THE CURRENT UNPROTECTED AND DISTURBED AREAS ARE MINIMIZED.
IN ORDER TO MINIMIZE THE TOPSOIL COMPACTION DURING CONSTRUCTION, THE BOUNDARIES FOR AREAS LEFT UNDISTURBED ARE TO BE STRICTLY ENFORCED. ALSO, THE CONTRACTOR IS TO MINIMIZE TRAFFIC ACROSS FINISHED AREAS, AS TO PREVENT UNNECESSARY COMPACTION.

2.2 PRESERVE 50 FOOT NATURAL BUFFER

THE CONTRACTOR MUST PRESERVE A 50 FOOT NATURAL BUFFER WHEN A SURFACE WATER IS LOCATED WITHIN 50 FEET OF THE PROJECTS EARTH DISTURBANCES AND STORMWATER FLOWS TO THE SURFACE WATER. THE CONTRACTOR IS NOT REQUIRED TO ENHANCE THE QUALITY OF THE VEGETATION THAT ALREADY EXISTS IN THE BUFFER OR PROVIDE VEGETATION IF NONE EXISTS.

2.3 CONTROL STORMWATER FLOWING ONTO AND THROUGH THE PROJECT

a9!{¦w9{ {Ih¦[5 .9 ¢!Y9b ¢h 9b{¦w9 ¢I!¢ ά/[9!bέ w¦bhCC Cwh a hCC {l¢9 l{ 5l±9w¢95 AROUND DISTURBED AREAS ON SITE. CARE SHOULD BE TAKEN THAT RE-ROUTING OFF SITE RUNOFF DOES NOT RESULT IN FLOODING OR OTHER ISSUES ON ADJACENT PROPERTIES.
(DESCRIBE ANTICIPATED AREAS OF OFF-SITE STORMWATER RUN ON; DESCRIBE BMPS, SUCH AS DIVERSION BERMS AND/OR DITCHES USES TO DIVERT FLOWS AROUND DISTURBED AREAS. INCLUDE ROCK CHECK DAMS WHERE APPROPRIATE)

BMP DESCRIPTION: TEMPORARY DIVERSION DITCH

INSTALLATION SCHEDULE: INSTALL TEMPORARY DIVERSION DITCHES AS SHOWN ON THE SWPPP PLAN SHEETS, AND AS NEEDED THROUGHOUT CONSTRUCTION, PRIOR TO UP GRADIENT GROUND DISTURBING ACTIVITIES

MAINTENANCE AND INSPECTION REQUIREMENTS: THE WETTED PERIMETER OF ANY TEMPORARY OR PERMANENT DRAINAGE DITCH MUST BE STABILIZED WITHIN 200 LINEAL FEET FROM THE PROPERTY EDGE OR FROM THE POINT OF DISCHARGE INTO ANY SURFACE WATER. THIS STABILIZATION MUST BE COMPLETED WITHIN 24 HOURS OF CONNECTING TO A SURFACE WATER. THE REMAINDER OF THE DITCH MUST BE STABILIZED WITHIN 14 DAYS OF CONNECTING TO A SURFACE WATER AND AFTER CONSTRUCTION HAS CEASED.

TEMPORARY OR PERMANENT DITCHES THAT ARE BEING USED AS A SEDIMENT CONTAINMENT SYSTEM DO NOT NEED TO BE STABILIZED, BUT MUST BE STABILIZED WITHIN 24 HOURS AFTER NO LONGER BEING USED AS A SEDIMENT CONTAINMENT SYSTEM.

5l¢/I9{ a¦{¢ .9 lb{t9/¢95 9±9w¸ т 5!¸{Ɫ !b5 ²l¢Ilb нп Ih¦w{ !C¢9w ! лфрέ нпIh¦w RAIN EVENT. ANY SEDIMENT DEPOSITED IN DIVERSION DITCHES MUST BE REMOVED AND ANY EXPOSED SOILS STABILIZED WITHIN 7 DAYS OF DISCOVERY UNLESS PRECLUDED BY LEGAL, REGULATORY, OR PHYSICAL ACCESS CONSTRAINTS. IF PRECLUDED, NOTE REASON FOR DELAY ON MAINTENANCE LOG.

RESPONSIBLE STAFF (CONTRACTOR TO COMPLETE):

2.4 STABILIZE SOILS

1. TEMPORARY SEEDING - DISTURBED AREAS THAT ARE NOT YET AT FINAL GRADE BUT THAT WILL NOT BE ACTIVELY WORKED FOR 14 DAYS OR MORE MUST BE TEMPORARILY STABILIZED. TEMPORARY STABILIZATION MUST BE INITIATED IMMEDIATELY WHERE WORK HAS TEMPORARILY CEASED AND MUST BE COMPLETED NO LATER THAN 14 CALENDAR DAYS AFTER WORK IN THAT PORTION OF THE SITE HAS TEMPORARILY CEASED. (MODIFY THE FOLLOWING PER PROJECT REQUIREMENTS) TEMPORARY SEEDING SHALL BE IN ACCORDANCE WITH MN/DOT SEED MIXTURE NUMBER 21-111 OR 21-112 DEPENDING ON THE SEASON OF PLANTING (SEE MN/DOT SPECIFICATION SECTION 2575.3) SEEDING METHOD AND APPLICATION RATE SHALL CONFORM TO MN/DOT SPECIFICATION SECTION 2575.3. TEMPORARY MULCH SHALL BE APPLIED IN ACCORDANCE WITH MN/DOT SPECIFICATION SECTION 2575.3C. ALTERNATIVELY, HYDRAULIC SOIL STABILIZER IN ACCORDANCE WITH MN/DOT SPECIFICATION SECTION 2575.3E MAY BE USED IN PLACE OF TEMPORARY MULCH.
2. PERMANENT STABILIZATION - ALL AREAS AT FINAL GRADE MUST BE STABILIZED WITHIN 14 DAYS AFTER COMPLETION OF THE MAJOR CONSTRUCTION ACTIVITY. PERMANENT STABILIZATION MUST BE INITIATED IMMEDIATELY WERE WORK HAS PERMANENTLY CEASED AND MUST BE COMPLETED NO LATER THAN 14 CALENDAR DAYS AFTER CONSTRUCTION ACTIVITY IN THAT PORTION OF THE SITE HAS PERMANENTLY CEASED. SEEDED AREAS SHALL BE PROTECTED WITH MULCH. PERMANENT MULCH SHALL CONFORM TO MN/DOT SPECIFICATION 3882, TYPE 3 AT 2 TONS/ACRE AND SHALL BE DISK ANCHORED. HYDRAULIC SOIL STABILIZER MAY BE USED IN PLACE OF MULCH IF APPROVED BY CIVIL ENGINEER. IF HYDRAULIC SOIL STABILIZER IS USED, IT SHALL BE MN/DOT TYPE 6. (DESCRIBE THE PERMANENT STABILIZATION).

2.5 PROTECT SLOPES

STEEP SLOPE AREAS - THE CONTRACTOR MUST MINIMIZE THE NEED FOR DISTURBANCE OF PORTIONS OF THE PROJECT THAT HAVE STEEP SLOPES (3:1 OR STEEPER). FOR THOSE SLOPED AREAS WHICH MUST BE DISTURBED, THE CONTRACTOR MUST USE TECHNIQUES SUCH AS PHASING AND STABILIZATION PRACTICES DESIGNED FOR STEEP SLOPES, SUCH AS DRAINING AND TERRACING. SLOPES STEEPER THAN 3:1 MUST BE PROTECTED BY EROSION CONTROL BLANKETS.

BMP DESCRIPTION: EROSION CONTROL BLANKET

INSTALLATION SCHEDULE: INSTALL EROSION CONTROL BLANKETS AS SHOWN ON THE SWPPP PLAN SHEETS, AND AS NEEDED THROUGHOUT CONSTRUCTION, WITHIN THE TIMEFRAME ALLOWED FOR STABILIZATION AFTER WORK HAS CEASED IN AN AREA, DEPENDING ON THE LOCATION (I.E. 24 HOURS, 7 DAYS, 14 DAYS)

MAINTENANCE AND INSPECTION REQUIREMENTS: TO FUNCTION PROPERLY, EROSION CONTROL BLANKETS MUST BE IN CONTACT WITH THE SOIL BENEATH THE BLANKET. BLANKETS MUST BE SECURED PER THE CONSTRUCTION DETAIL PROVIDED WITH THE SWPPP PLAN SHEETS. lb{t9/¢ .[!bY9¢{ 9±9w¸ т 5!¸{ hw ²l¢Ilb нп Ih¦w{ !C¢9w ! лфрέ нпIh¦w w!lb 9±9b¢ф REPAIR OR REPLACE NON-FUNCTIONAL BLANKETS WITHIN 24 HOURS AFTER DISCOVERY.

RESPONSIBLE STAFF (CONTRACTOR TO COMPLETE):

2.6 PROTECT STORM DRAIN INLETS

ALL STORM DRAIN INLETS MUST BE PROTECTED BY APPROPRIATE MEANS DURING CONSTRUCTION UNTIL ALL SOURCES WITH POTENTIAL FOR DISCHARGING TO THE INLET HAVE BEEN STABILIZED. INLET PROTECTION MAY BE REMOVED FOR A PARTICULAR INLET IF A SPECIFIC SAFETY CONCERN (STREET FLOODING/FREEZING) HAS BEEN IDENTIFIED AND PERMITTEE(S) HAVE RECEIVED WRITTEN CORRESPONDENCE FROM THE JURISDICTIONAL AUTHORITY (E.G. CITY/COUNTY/TOWNSHIP/MNDOT/ETC.) VERIFYING THE NEED FOR REMOVAL. THE WRITTEN CORRESPONDENCE MUST BE DOCUMENTED IN THIS SWPPP.

BMP DESCRIPTION: SILT FENCE INLET PROTECTION

INSTALLATION SCHEDULE: INSTALL INLET PROTECTION IN EXISTING STRUCTURES AS DIRECTED ON THE SWPPP PLAN SHEETS, AND AS NEEDED THROUGHOUT CONSTRUCTION, PRIOR TO BEGINNING GROUND DISTURBING ACTIVITIES UP GRADIENT OF THE INLET. INSTALL INLET PROTECTION ON NEW STRUCTURES AS SOON AS THE STRUCTURES ARE PUT INTO USE.

MAINTENANCE AND INSPECTION REQUIREMENTS: INSPECT SILT FENCE EVERY 7 DAYS OR ²l¢Ilb нп Ih¦w{ !C¢9w ! лфрέ нпIh¦w w!lb 9±9b¢ф {95l a9b¢ !//¦ a¦[!¢lhb{ {Ih¦[5 BE REMOVED WHEN SEDIMENT BUILD-UP REACHES 1/2 THE HEIGHT OF THE SILT FENCE. THIS MAINTENANCE MUST BE COMPLETED WITHIN 24 HOURS OF DISCOVERY.

RESPONSIBLE STAFF (CONTRACTOR TO COMPLETE):

BMP DESCRIPTION: INLET PROTECTION (INLET INSERT DEVICE)
INSTALLATION SCHEDULE: INSTALL INLET PROTECTION IN EXISTING STRUCTURES AS DIRECTED ON THE SWPPP PLAN SHEETS, AND AS NEEDED THROUGHOUT CONSTRUCTION, PRIOR TO BEGINNING GROUND DISTURBING ACTIVITIES UP GRADIENT OF THE INLET. INSTALL INLET PROTECTION ON NEW STRUCTURES AS SOON AS THE STRUCTURES ARE PUT INTO USE.

MAINTENANCE AND INSPECTION REQUIREMENTS: INSPECT INLET PROTECTION EVERY 7 5!¸{ hw ²l¢Ilb нп Ih¦w{ !C¢9w ! лфрέ нпIh¦w w!lb 9±9b¢ф {95l a9b¢ !//¦ a¦[!¢lhb{ SHOULD BE REMOVED WHEN SEDIMENT BUILD-UP REACHES 1/2 THE CAPACITY OF THE DEVICE, OR, IF MORE STRINGENT, IN ACCORDANCE WITH MANUFACTURER RECOMMENDATIONS. THIS MAINTENANCE MUST BE COMPLETED WITHIN 24 HOURS OF DISCOVERY.

RESPONSIBLE STAFF (CONTRACTOR TO COMPLETE):

BMP DESCRIPTION: (ADD BMPS OR DELETE THIS SECTION)

INSTALLATION SCHEDULE:

MAINTENANCE AND INSPECTION REQUIREMENTS:

RESPONSIBLE STAFF (CONTRACTOR TO COMPLETE):

2.7 ESTABLISH PERIMETER CONTROLS AND SEDIMENT BARRIERS

ALL STRUCTURAL SEDIMENT CONTROLS INTENDED TO RECEIVE AND TREAT CONSTRUCTION RUNOFF MUST BE IN PLACE BEFORE ANY UP GRADIENT LAND ALTERATION CAN BEGIN AND MUST STAY IN OPERATION UNTIL FINAL STABILIZATION OF THE SITE HAS BEEN ACHIEVED.

TEMPORARY SOIL STOCKPILES MUST HAVE SILT FENCE OR OTHER EFFECTIVE SEDIMENT CONTROLS, AND CANNOT BE PLACED IN ANY NATURAL BUFFERS OR SURFACE WATERS, INCLUDING STORMWATER CONVEYANCES SUCH AS CURB AND GUTTER SYSTEMS, OR CONDUITS AND DITCHES UNLESS THERE IS A BYPASS IN PLACE FOR THE STORMWATER.

BMP DESCRIPTION: SILT FENCE

INSTALLATION SCHEDULE: INSTALL SILT FENCE AS DIRECTED ON THE SWPPP PLAN SHEETS, AND AS NEEDED THROUGHOUT CONSTRUCTION, PRIOR TO COMMENCING UP GRADIENT LAND DISTURBING ACTIVITIES.

MAINTENANCE AND INSPECTION REQUIREMENTS: INSPECT SILT FENCE EVERY 7 DAYS OR ²l¢Ilb нп Ih¦w{ !C¢9w ! лфрέ нпIh¦w w!lb 9±9b¢ф {95l a9b¢ !//¦ a¦[!¢lhb{ {Ih¦[5 BE REMOVED WHEN SEDIMENT BUILD-UP REACHES 1/2 THE HEIGHT OF THE SILT FENCE. THIS MAINTENANCE MUST BE COMPLETED WITHIN 24 HOURS OF DISCOVERY.

RESPONSIBLE STAFF (CONTRACTOR TO COMPLETE):

BMP DESCRIPTION: BIOLOGS

INSTALLATION SCHEDULE: INSTALL BIOLOGS AS DIRECTED ON THE SWPPP PLAN SHEETS, AND AS NEEDED THROUGHOUT CONSTRUCTION, PRIOR TO COMMENCING UP GRADIENT LAND DISTURBING ACTIVITIES.

MAINTENANCE AND INSPECTION REQUIREMENTS: INSPECT BIOLOGS EVERY 7 DAYS OR ²l¢Ilb нп Ih¦w{ !C¢9w ! лфрέ нпIh¦w w!lb 9±9b¢ф {95l a9b¢ !//¦ a¦[!¢lhb{ {Ih¦[5 BE REMOVED WHEN SEDIMENT BUILD-UP REACHES 1/2 THE HEIGHT OF THE BIOLOG. THIS MAINTENANCE MUST BE COMPLETED WITHIN 24 HOURS OF DISCOVERY.

RESPONSIBLE STAFF (CONTRACTOR TO COMPLETE):

2.8 RETAIN SEDIMENT ON-SITE

ANY OFF-SITE ACCUMULATIONS OF SEDIMENT MUST BE REMOVED IN A MANNER AND AT A FREQUENCY SUFFICIENT TO MINIMIZE OFF-SITE IMPACT (E.G. FUGITIVE SEDIMENT IN STREETS COULD BE WASHED INTO STORM SEWERS BY THE NEXT RAIN AND/OR POSE A SAFETY HAZARD TO USERS OF PUBLIC STREETS.
[FILL OUT THE FOLLOWING IF SEDIMENTATION BASINS AND SEDIMENT TRAPS ARE TO BE UTILIZED - REMINDER, TEMPORARY SEDIMENTATION BASINS ARE REQUIRED BY THE GENERAL PERMIT WHERE DISTURBED AREAS OF 10 ACRES OR MORE DRAIN TO A COMMON LOCATION (PART III.C); FOR DISCHARGES TO SOME SPECIAL WATERS AND IMPAIRED WATERS, TEMPORARY SEDIMENTATION BASINS ARE REQUIRED WHERE DISTURBED AREAS OF 5 ACRES OR MORE DRAIN TO A COMMON LOCATION (APPENDIX A) IF A TEMPORARY SEDIMENTATION BASIN IS REQUIRED BUT UNFEASIBLE, A NOT MUST BE ADDED TO THE DOCUMENT STATING SUCH.] TEMPORARY SEDIMENTATION BASINS AND SEDIMENT TRAPS ARE TO BE UTILIZED DURING CONSTRUCTION TO CAPTURE AND TREAT SEDIMENT LADEN RUN OFF. THE TEMPORARY SEDIMENTATION BASINS HAVE BEEN DESIGNED TO [RETAIN THE RUNOFF FROM A 2 YEAR, 24 HOUR STORM EVENT, EXCEPT THAT IN NO CASE SHALL THE BASIN PROVIDE LESS THAN 1,800 CUBIC FEET OF LIVE STORAGE] OR [PROVIDE 3,600 CUBIC FEET OF STORAGE BELOW THE OUTLET PIPE PER ACRE DRAINED TO THE BASIN]. THE OUTLET STRUCTURE MUST BE DESIGNED TO WITHDRAW WATER FROM THE SURFACE IN ACCORDANCE WITH PART III.C OF THE GENERAL PERMIT. (MODIFY TO BE IN ACCORDANCE WITH APPENDIX A OF THE PERMIT IF APPLICABLE)

BMP DESCRIPTION: TEMPORARY SEDIMENTATION BASIN

INSTALLATION SCHEDULE: INSTALL TEMPORARY SEDIMENTATION BASIN PRIOR TO BEGINNING UPSLOPE LAND DISTURBING ACTIVITIES. IF THIS IS NOT POSSIBLE DUE TO EXISTING TOPOGRAPHY, LIMIT DISTURBANCE TO ONLY THOSE AREAS NECESSARY TO INSTALL TEMPORARY SEDIMENTATION BASIN.

MAINTENANCE AND INSPECTION REQUIREMENTS: INSPECT TEMPORARY SEDIMENTATION .!{lb{ 9±9w¸ т 5!¸{ hw ²l¢Ilb нп Ih¦w{ !C¢9w ! лфрέ нпIh¦w w!lb 9±9b¢ф TEMPORARY AND PERMANENT SEDIMENTATION BASINS MUST BE DRAINED AND THE {95l a9b¢ w9ah±95 ² I9b ¢I9 ±h[¦ a9 hC {95l a9b¢ /h[[9/¢95 lb ¢I9 .!{lb w9!/I9{ ΟΥ THE STORAGE VOLUME. THIS MAINTENANCE MUST BE COMPLETED WITHIN 72 HOURS OF DISCOVERY, OR AS SOON AS FIELD CONDITIONS ALLOW ACCESS. IF CONDITIONS DO NOT ALLOW MAINTENANCE TO BE PERFORMED WITHIN 72 HOURS, DOCUMENT THE CAUSE OF DELAY ON THE MAINTENANCE FORM. REFER TO SECTION 3.1 OF THIS SWPPP FOR BASIN DRAINING GUIDELINES.

RESPONSIBLE STAFF (CONTRACTOR TO COMPLETE):

2.9 ESTABLISH STABILIZED CONSTRUCTION EXITS

ROCK CONSTRUCTION EXITS HAVE BEEN DESIGNED TO PREVENT SEDIMENT TRACK OFF. IF THERE IS EVIDENCE OF SEDIMENT TRACKING FROM VEHICLES IN PAVED AREAS, THE SEDIMENT MUST BE REMOVED BY STREET SWEEPING OR OTHER METHOD AS SOON AS FEASIBLY POSSIBLE, BUT NO LONGER THAN 24 HOURS AFTER DISCOVERY. [DESCRIBE ADDITIONAL BMPS USED TO MINIMIZE VEHICLE TRACKING]

BMP DESCRIPTION: ROCK EXIT DRIVE

INSTALLATION SCHEDULE: INSTALL ROCK EXITS AS SHOWN ON THE SWPPP PLAN SHEETS AS SOON AS POSSIBLE AT THE BEGINNING OF CONSTRUCTION ACTIVITIES. INSTALL ADDITIONAL ROCK EXIT DRIVES AS NEEDED THROUGHOUT CONSTRUCTION.

MAINTENANCE AND INSPECTION REQUIREMENTS: INSPECT ROCK EXIT DRIVES EVERY 7 DAYS hw ²l¢Ilb нп Ih¦w{ !C¢9w ! лфрέ нпIh¦w w!lb 9±9b¢ф wh/Y 9·l¢ 5wl±9{ a¦{¢ .9 PERIODICALLY 'REFRESHED' TO ENSURE PROPER FUNCTIONALITY. MAINTENANCE SHOULD BE PERFORMED WHEN THE EXIT APPEARS SMOOTH AND COMPACTED OR WHEN THE ROCK EXIT DRIVE CEASES TO FUNCTION PROPERLY. EXIT LOCATIONS SHOULD BE INSPECTED FOR SIGNS OF OFF-SITE SEDIMENT TRACKING. TRACKED SEDIMENT MUST BE REMOVED FROM ALL PAVED SURFACES WITHIN 24 HOURS OF DISCOVERY. STREET SWEEPING MUST BE USED IF ROCK EXIT DRIVES ARE NOT ADEQUATE TO PREVENT SEDIMENT FROM BEING TRACKED ONTO THE STREET.

RESPONSIBLE STAFF (CONTRACTOR TO COMPLETE):

Sambatek
www.sambatek.com
12800 Whitewater Drive, Suite 300
Minnetonka, MN 55343
763.476.6010 telephone
763.476.8532 facsimile
Engineering | Surveying | Planning | Environmental

Client
SHAKOPEE CROSSINGS LIMITED PARTNERSHIP
8170 CARRIAGE COURT NORTH
SUITE 210
SHAKOPEE, MN 55379

Project
SOUTHBRIDGE CROSSINGS EAST 5TH ADDITION

Location
SHAKOPEE, MN

Certification
I hereby certify that this plan, specification or report was prepared by me or under my direct supervision and that I am a duly licensed professional ENGINEER under the laws of the state of Minnesota.

George D. Abernathy
Registration No. 43505 Date: 10/19/2018
If applicable, contact us for a wet signed copy of this plan which is available upon request at Sambatek's, Minnetonka, MN office.

Summary
Designed: GDA Drawn: JMW
Approved: BDB Book / Page:
Phase: PERMIT Initial Issued: 10/19/2018

Revision History

No.	Date	By	Submittal / Revision
A	10/19/18	JMW	Building Revisions

Sheet Title
SWPPP NARRATIVE

Sheet No. C5.04 Revision A

Project No. 20787

2.10 CONTROL STORMWATER DISCHARGE POINTS

1. PIPE OR OTHER TEMPORARY OR PERMANENT OUTLETS MUST BE STABILIZED WITH TEMPORARY OR PERMANENT ENERGY DISSIPATION WITHIN 24 HOURS AFTER CONNECTION TO A SURFACE WATER.
2. STABILIZE THE NORMAL WETTED PERIMETER OF A DRAINAGE DITCH OR SWALE WITHIN 200 FEET OF THE PROPERTY EDGE WITHIN 24 HOURS OF CONNECTION TO A SURFACE WATER. THE REMAINDER OF THE DITCH MUST BE STABILIZED WITHIN 14 DAYS OF CONNECTION.

BMP DESCRIPTION: RIPRAP

INSTALLATION SCHEDULE: INSTALL RIPRAP AS SHOWN ON SWPPP PLANS AND/OR GRADING PLANS. INSTALLATION MUST BE COMPLETED WITHIN 24 HOURS OF CONNECTING TO A SURFACE WATER.

MAINTENANCE AND INSPECTION REQUIREMENTS: INSPECT OUTLETS EVERY 7 DAYS OR ²!¢!lb sn Ih';w{ !C¢9w ! .nlpź snn I h';w w!lb 9±59b¢¶ w9t!lw£w9t[!/9 hw{;t[9a 9b¢ NON-FUNCTIONING RIPRAP ENERGY DISSIPATION WITHIN 24 HOURS OF DISCOVERY. ANY OFF SITE ACCUMULATION OF SEDIMENT MUST BE REMOVED IN MANNER AND AT A FREQUENCY TO MINIMIZE OFF-SITE IMPACTS.

RESPONSIBLE STAFF (CONTRACTOR TO COMPLETE):

2.11 CHEMICAL EROSION AND SEDIMENT CONTROL BMPS

POLYMERS, FLOCCULANTS, OR OTHER SEDIMENTATION TREATMENT CHEMICALS MUST BE APPLIED AFTER CONVENTIONAL EROSION AND SEDIMENT CONTROL DEVICES ARE UTILIZED. CHEMICALS MAY ONLY BE APPLIED WHERE TREATED STORMWATER IS DIRECTED TO A SEDIMENT CONTROL SYSTEM WHICH ALLOWS FOR FILTRATION OR SETTLEMENT OF THE FLOC PRIOR TO DISCHARGE. CONSIDERATION MUST BE GIVEN WHEN SELECTING CHEMICALS TO THE EXPECTED SOIL TYPES TO BE EXPOSED DURING CONSTRUCTION, AND TO THE EXPECTED TURBIDITY, PH AND FLOW RATE OF STORMWATER FLOWING INTO THE CHEMICAL TREATMENT SYSTEM OR AREA. IF CHEMICALS ARE PART OF THE EROSION CONTROL PLAN, THEY MUST BE USED IN ACCORDANCE WITH ACCEPTED ENGINEERING PRACTICES, AND WITH DOSING SPECIFICATION AND SEDIMENT REMOVAL DESIGN SPECIFICATIONS PROVIDED BY THE MANUFACTURER OR PROVIDER/SUPPLIER OF THE APPLICABLE CHEMICALS.

SECTION 3: DEWATERING & BASIN DRAINING

3.1 DEWATERING AND BASIN DRAINING

ALLOWABLE NON-STORMWATER DISCHARGES, AS DEFINED BY THE GENERAL PERMIT, ARE LIMITED TO DEWATERING AND BASIN DRAINING. DEWATERING OR BASIN DRAINING THAT MAY HAVE TURBID OR SEDIMENT LADEN DISCHARGE WATER MUST BE DISCHARGED TO A TEMPORARY OR PERMANENT SEDIMENTATION BASIN ON THE PROJECT SITE WHENEVER POSSIBLE. IF THE WATER CANNOT BE DISCHARGED TO A SEDIMENTATION BASIN PRIOR TO ENTERING THE SURFACE WATER, IT MUST BE TREATED WITH THE APPROPRIATE BMPS, SUCH THAT THE DISCHARGE DOES NOT ADVERSELY AFFECT THE RECEIVING WATER OR DOWNSTREAM LANDOWNERS. THE CONTRACTOR MUST ENSURE THAT DISCHARGE POINTS ARE ADEQUATELY PROTECTED FROM EROSION AND SCOUR. THE DISCHARGE MUST BE DISPERSED OVER NATURAL ROCK RIPRAP, SAND BAGS, PLASTIC SHEETING OR OTHER ACCEPTED ENERGY DISSIPATION MEASURES. ADEQUATE SEDIMENTATION CONTROL MEASURES ARE REQUIRED FOR DISCHARGE WATER THAT CONTAINS SUSPENDED SOLIDS. ALL WATER FROM DEWATERING OR BASIN DRAINING MUST BE DISCHARGED IN A MANNER THAT DOES NOT CAUSE NUISANCE CONDITIONS, EROSION IN RECEIVING CHANNELS OR ON DOWNSLOPE PROPERTIES, OR INUNDATION IN WETLANDS CAUSING SIGNIFICANT ADVERSE IMPACT TO THE WETLAND. IF THE CONTRACTOR ELECTS TO UTILIZE FILTERS WITH BACKWASH WATER, THE CONTRACTOR MUST HAUL THE BACKWASH WATER AWAY FOR DISPOSAL, RETURN THE BACKWATER TO THE BEGINNING OF THE TREATMENT PROCESS, OR INCORPORATE THE BACKWASH WATER INTO THE SITE IN A MANNER THAT DOES NOT CAUSE EROSION. THE CONTRACTOR MUST REPLACE AND CLEAN THE FILTER MEDIA USED IN DEWATERING DEVICES WHEN REQUIRED TO RETAIN ADEQUATE FUNCTION. CONTRACTOR SHALL OBTAIN A WATER USE (APPROPRIATION) PERMIT FROM THE MINNESOTA DNR FOR DEWATERING ACTIVITIES THAT WILL WITHDRAW MORE THAN 10,000 GALLONS OF WATER PER DAY OR 1 MILLION GALLONS PER YEAR. (PROJECT SPECIFIC DEWATERING PROCESS MUST BE DEFINED)

SECTION 4: GOOD HOUSEKEEPING BMPS

4.1 MATERIAL HANDLING AND WASTE MANAGEMENT

1. SOLID WASTE DISPOSAL - NO SOLID MATERIALS, INCLUDING CONSTRUCTION AND DEMOLITION MATERIALS, COLLECTED SEDIMENT, ASPHALT AND CONCRETE MILLINGS, SHALL BE ALLOWED TO BE CARRIED FROM THE SITE WITH STORM WATER. ALL SOLID WASTE, INCLUDING DISPOSABLE MATERIALS INCIDENTAL TO THE MAJOR CONSTRUCTION ACTIVITIES, MUST BE COLLECTED AND PLACED IN CONTAINERS. THE CONTAINERS WILL BE EMPTIED PERIODICALLY BY A CONTRACT TRASH DISPOSAL SERVICE AND HAULED AWAY FROM THE SITE. DISPOSAL OF SOLID WASTES MUST COMPLY WITH MPCA REQUIREMENTS.
2. GROUNDWATER PROTECTION - SUBSTANCES THAT HAVE THE POTENTIAL FOR POLLUTING SURFACE AND/OR GROUNDWATER MUST BE CONTROLLED BY WHATEVER MEANS NECESSARY IN ORDER TO ENSURE THAT THEY DO NOT DISCHARGE FROM THE SITE. AS AN EXAMPLE, SPECIAL CARE MUST BE EXERCISED DURING EQUIPMENT FUELING AND SERVICING OPERATIONS. IF A SPILL OCCURS, IT MUST BE CONTAINED AND DISPOSED OF SO THAT IT WILL NOT FLOW FROM THE SITE OR ENTER GROUNDWATER, EVEN IF THIS REQUIRES REMOVAL, TREATMENT, AND DISPOSAL OF SOIL. IN THIS REGARD, POTENTIALLY POLLUTING SUBSTANCES SHOULD BE HANDLED IN A MANNER CONSISTENT WITH THE IMPACT THEY REPRESENT
3. SANITARY FACILITIES - ALL PERSONNEL INVOLVED WITH CONSTRUCTION ACTIVITIES MUST COMPLY WITH STATE AND LOCAL SANITARY SEPTIC SYSTEM REGULATIONS. PORTABLE TOILETS MUST BE POSITIONED SO THAT THEY ARE SECURE AND WILL NOT BE TIPPED OR KNOCKED OVER. TEMPORARY SANITARY FACILITIES WILL BE PROVIDED AT THE SITE THROUGHOUT THE CONSTRUCTION PHASE WHERE REQUIRED BY STATE OR LOCAL REGULATIONS. THEY MUST BE UTILIZED BY ALL CONSTRUCTION PERSONNEL AND BE SERVICED BY A COMMERCIAL OPERATOR.

4.2 ESTABLISH PROPER STORAGE, HANDLING & DISPOSAL PRACTICES

HAZARDOUS MATERIALS & TOXIC WASTE (INCLUDING OIL, DIESEL FUEL, GASOLINE, HYDRAULIC FLUIDS, PAINT SOLVENTS, PETROLEUM-BASED PRODUCTS, WOOD PRESERVATIVES, ADDITIVES, CURING COMPOUNDS, AND ACIDS) MUST BE STORED IN WATERPROOF CONTAINERS WITH SECONDARY CONTAINMENT, AND THEIR OCATION(S) MUST BE NOTED ON THE SWPPP MAP. EXCEPT DURING APPLICATION, THE CONTENTS MUST BE KEPT IN TRUCKS OR WITHIN STORAGE FACILITIES WITH RESTRICTED ACCESS TO PREVENT VANDALISM. STORAGE AND DISPOSAL OF HAZARDOUS WASTE MUST BE IN COMPLIANCE WITH MCPA REGULATIONS. RUNOFF CONTAINING SUCH MATERIAL MUST BE COLLECTED, REMOVED FROM THE SITE, TREATED, AND DISPOSED AT AN APPROVED SOLID WASTE OR CHEMICAL DISPOSAL FACILITY. BUILDING PRODUCTS THAT HAVE THE POTENTIAL TO LEACH POLLUTANTS AND PESTICIDES, HERBICIDES, INSECTICIDES, FERTILIZERS, TREATMENT CHEMICALS AND LANDSCAPE MATERIALS MUST BE UNDER COVER BY PLASTIC SHEETING OR TEMPORARY ROOFS TO PREVENT DISCHARGE, OR PROTECTED BY SIMILAR EFFECTIVE MEANS TO PREVENT CONTACT WITH STORMWATER.

4.3 DESIGNATE WASHOUT AREAS

THE CONTRACTOR SHALL DESIGNATE AREAS FOR CONCRETE AND OTHER (STUCCO, PAINT, FOR RELEASE OILS, CURING COMPOUNDS AND OTHER CONSTRUCTION MATERIALS RELATED TO THE CONSTRUCTION ACTIVITY) WASHOUTS, AND NOTE THE LOCATIONS ON THE SITE MAP. ALL LIQUID AND SOLID WASTES GENERATED BY WASHOUT OPERATIONS MUST BE CONTAINED IN A LEAK PROOF CONTAINMENT FACILITY OR IMPERMEABLE LAYER. A COMPACTED CLAY LINER IS NOT AN ACCEPTABLE IMPERMEABLE LAYER. THE LIQUID AND SOLID WASTES MUST NOT CONTACT THE GROUND, AND THERE MUST NOT BE RUNOFF FROM THE WASHOUT OPERATIONS OR AREAS. LIQUID AND SOLID WASTE MUST BE DISPOSED OF PROPERLY AND IN COMPLIANCE WITH MPCA REGULATIONS. A SIGN MUST BE INSTALLED ADJACENT TO EACH WASHOUT FACILITY TO INFORM SITE WORKERS TO UTILIZE PROPER FACILITIES FOR DISPOSAL OF CONCRETE AND OTHER WASTES.

BMP DESCRIPTION: CONCRETE WASHOUT

INSTALLATION SCHEDULE: PRIOR TO CONCRETE WORK.

MAINTENANCE AND INSPECTION REQUIREMENTS: INSPECT CONCRETE WASHOUTS FOR 9±59b/9 hC 5{/!tw09 9±9w, r 5!,{ hw ²¢!lb sn Ih';w{ !C¢9w ! .nlpź snn I h';w w!lb EVENT. REPAIR, REPLACE OR SUPPLEMENT NON-FUNCTIONING CONCRETE WASHOUTS WITHIN 24 HOURS OR PRIOR TO NEXT USE.

RESPONSIBLE STAFF (CONTRACTOR TO COMPLETE):

4.4 ESTABLISH PROPER EQUIPMENT/VEHICLE FUELING AND MAINTENANCE PRACTICES

THE CONTRACTOR SHALL DESIGNATE AREAS FOR EQUIPMENT FUELING, CLEANING, MAINTENANCE AND REPAIR, AND NOTE THE LOCATION(S) ON THE SWPPP SITE MAPS. RUNOFF MUST BE CONTAINED WITHIN THE DESIGNATED AREAS (I.E. THROUGH USE OF A TEMPORARY BERM). THE AREAS MUST NOT BE LOCATED IN ANY SURFACE WATER. SPECIAL CARE MUST BE EXERCISED DURING EQUIPMENT FUELING AND SERVICING OPERATIONS. IF A SPILL OCCURS, IT MUST BE CONTAINED AND DISPOSED OF SO THAT IT WILL NOT FLOW FROM THE SITE OR ENTER GROUNDWATER, EVEN IF THIS REQUIRES REMOVAL, TREATMENT, AND DISPOSAL OF SOIL. IT IS THE CONTRACTORS RESPONSIBILITY TO ENSURE THAT ADEQUATE SUPPLIES ARE AVAILABLE AT ALL TIMES TO CLEAN UP DISCHARGED MATERIALS AND THAT AN APPROPRIATE DISPOSAL METHOD IS AVAILABLE FOR RECOVERED SPILLED MATERIALS. NO ENGINE DEGREASING IS ALLOWED ON SITE.

4.5 CONTROL EQUIPMENT/VEHICLE WASHING

THE CONTRACTOR SHALL DESIGNATE LOCATION(S) FOR VEHICLE WASHING, AND NOTE THE LOCATION(S) ON THE SWPPP SITE MAP. RUNOFF FROM THE WASHING AREA MUST BE CONTAINED IN A SEDIMENT BASIN OR OTHER SIMILARLY EFFECTIVE CONTROLS AND WASTE FROM THE WASHING ACTIVITY MUST BE PROPERLY DISPOSED OF. THE CONTRACTOR MUST PROPERLY USE AND STORE SOAPS, DETERGENTS AND SOLVENTS. ENGINE DEGREASING OF TRUCKS AND OTHER CONSTRUCTION VEHICLES IS ALSO PROHIBITED.

4.6 SPILL PREVENTION AND CONTROL PLAN

1. ACCIDENTAL SPILL - DISCHARGE OF OIL OR OTHER HAZARDOUS SUBSTANCES IS SUBJECT TO REPORTING AND CLEAN UP REQUIREMENTS. IN CASE OF AN ACCIDENTAL SPILL, THE MINNESOTA POLLUTION CONTROL AGENCY IS TO BE NOTIFIED AT THEIR 24-HOUR TELEPHONE NUMBER: 651-649-5451. REFER TO SECTION V, ITEM C OF THE GENERAL PERMIT.
2. GROUNDWATER PROTECTION - SUBSTANCES THAT HAVE THE POTENTIAL FOR POLLUTING SURFACE AND/OR GROUNDWATER MUST BE CONTROLLED BY WHATEVER MEANS NECESSARY IN ORDER TO ENSURE THAT THEY DO NOT DISCHARGE FROM THE SITE. AS AN EXAMPLE, SPECIAL CARE MUST BE EXERCISED DURING EQUIPMENT FUELING AND SERVICING OPERATIONS. IF A SPILL OCCURS, IT MUST BE CONTAINED AND DISPOSED OF SO THAT IT WILL NOT FLOW FROM THE SITE OR ENTER GROUNDWATER, EVEN IF THIS REQUIRES REMOVAL, TREATMENT, AND DISPOSAL OF SOIL. IN THIS REGARD, POTENTIALLY POLLUTING SUBSTANCES SHOULD BE HANDLED IN A MANNER CONSISTENT WITH THE IMPACT THEY REPRESENT.

SECTION 5: POST-CONSTRUCTION BMPS

BMP DESCRIPTION: SUMP MANHOLE

INSTALLATION SCHEDULE: ALONG WITH STORM SEWER NETWORK

MAINTENANCE AND INSPECTION REQUIREMENTS: PRACTICE SHOULD BE INSPECTED (AND CLEANED OUT IF DEEMED NECESSARY) SEMI-ANNUALLY TO ENSURE THAT SEDIMENT IS NOT BEGINNING TO WASH OUT DURING STORM EVENTS. DEVICES SHOULD BE CLEANED OUT AT LEAST ONCE PER YEAR OR AS NEEDED.

RESPONSIBLE STAFF (CONTRACTOR TO COMPLETE):

SECTION 6: INSPECTIONS

6.1 INSPECTIONS

1. INSPECTION FREQUENCY AND RESPONSIBILITY

   BETWEEN THE TIME THIS SWPPP IS IMPLEMENTED AND FINAL SITE STABILIZATION IS ACHIEVED AND THE NOTICE OF TERMINATION FILED WITH THE MPCA, ALL DISTURBED AREAS AND POLLUTANT CONTROLS MUST BE INSPECTED AT LEAST ONCE EVERY SEVEN CALENDAR DAYS AND WITHIN 24 HOURS FOLLOWING A RAINFALL OF 0.5 INCHES OR GREATER. THE PURPOSE OF SITE INSPECTIONS IS TO ASSESS PERFORMANCE OF POLLUTANT CONTROLS. THE INSPECTIONS WILL BE CONDUCTED BY THE CONTRACTOR'S DESIGNATED REPRESENTATIVE. BASED ON THESE INSPECTIONS, THE CONTRACTOR WILL DECIDE WHETHER IT IS NECESSARY TO MODIFY THIS SWPPP, ADD OR RELOCATE STRUCTURAL BMPS, OR WHATEVER ELSE MAY BE NEEDED IN ORDER TO PREVENT POLLUTANTS FROM LEAVING THE SITE VIA STORM WATER RUNOFF. IF THE SWPPP REQUIRES MODIFICATION, THOSE CHANGES TO THE SWPPP MUST BE DOCUMENTED. THE CONTRACTOR HAS THE DUTY TO CAUSE POLLUTANT CONTROL MEASURES TO BE REPAIRED, MODIFIED, MAINTAINED, SUPPLEMENTED, OR WHATEVER ELSE IS NECESSARY IN ORDER TO ACHIEVE EFFECTIVE POLLUTANT CONTROL.

2. INSPECTION PROCEDURES - EXAMPLES OF PARTICULAR ITEMS TO EVALUATE DURING SITE INSPECTIONS ARE LISTED BELOW. THIS LIST IS NOT INTENDED TO BE COMPREHENSIVE. DURING EACH INSPECTION THE INSPECTOR MUST EVALUATE OVERALL POLLUTANT CONTROL SYSTEM PERFORMANCE AS WELL AS PARTICULAR DETAILS OF INDIVIDUAL SYSTEM COMPONENTS. ADDITIONAL FACTORS SHOULD BE CONSIDERED AS APPROPRIATE TO THE CIRCUMSTANCES.

   A. PRE-INSPESTION PREPARATION:

      1. INSPECTORS SHOULD BE FAMILIAR WITH THE SWPPP, INCLUDING THE EROSION AND SEDIMENT CONTROL PLANS, PAST INSPECTION REPORTS, AND MAINTENANCE LOGS.
      2. [DELETE THIS NOTE IF THE SITE DOES NOT HAVE SPECIAL DISCHARGE REQUIREMENTS] PAY SPECIAL ATTENTION TO STORM WATER DISCHARGE TO SPECIAL/IMPAIRED WATERS AND WETLANDS; DISCHARGES TO SPECIAL/IMPAIRED WATERS AND WETLANDS HAVE ADDITIONAL REQUIREMENTS THAT ARE DESCRIBED IN APPENDIX A OF THE GENERAL PERMIT, AND ADDRESSED IN THIS SWPPP.

   B. SITE ENTRY:

      1. BEFORE ENTERING THE SITE, OBSERVE THE SURROUNDINGS AND VARIOUS STAGES OF CONSTRUCTION. NOTE AREAS FOR IN-DEPTH REVIEW AND ANY POTENTIAL ISSUES.
      2. THIS IS A GOOD TIME TO VIEW CONSTRUCTION SITE VEHICLE EXIT LOCATIONS AND PERIMETER CONTROLS.

   C. RECORDS REVIEW:

      1. VERIFY THAT A COPY OF THE SWPPP AND APPLICATION FOR THE NPDES STORM WATER PERMIT, AND COPIES OF ALL CONSTRUCTION SITE INSPECTIONS ARE ON SITE.
      2. VERIFY THAT THE TIMING FOR INSTALLATION OF ALL EROSION PREVENTION AND SEDIMENT CONTROL BMPS, AS WELL AS CONSTRUCTION PHASING, IS GENERALLY BEING FOLLOWED.
      3. SWPPPS ARE INTENDED TO BE DYNAMIC DOCUMENTS, VERIFY THAT AMENDMENTS OR CHANGES TO THE SWPPP ARE BEING MADE WHEN:
         A. A CHANGE IN DESIGN, CONSTRUCTION, OPERATION, MAINTENANCE, WEATHER OR SEASONAL CONDITIONS HAVE A SIGNIFICANT EFFECT ON STORM WATER DISCHARGES
         B. INSPECTIONS INDICATE THE SWPPP IS NOT EFFECTIVE
         C. THE SWPPP IS NOT CONSISTENT WITH THE TERMS OF THE GENERAL PERMIT
         D. SITE INSPECTION (NOTE TIMELINES FOR MAINTENANCE INCLUDED IN INSPECTION/MAINTENANCE REPORT)
            1. INSPECT DISCHARGE POINTS DOWNSTREAM AND OFF-SITE AREAS FOR SIGNS OF IMPACT.
            2. INSPECT PERIMETER CONTROLS:
               A. HAVE PERIMETER CONTROLS BEEN PROPERLY INSTALLED AND MAINTAINED?
               B. ARE CONSTRUCTION ENTRANCES/EXITS FUNCTIONING PROPERLY? ARE ADDITIONAL ENTRANCES/EXITS BEING USED THAT ARE NOT STABILIZED?
               C. ALL STORM DRAINS MUST BE PROTECTED AND TEMPORARY STOCKPILES MUST HAVE SEDIMENT CONTROLS INSTALLED.
               D. ALL EXPOSED SOILS MUST HAVE TEMPORARY OR PERMANENT EROSION PROTECTION WITHIN 14 DAYS OF INACTIVITY.
            3. COMPARE BMPS IN THE SWPPP WITH CONSTRUCTION SITE CONDITIONS: ARE REQUIRED BMPS IN PLACE; ARE ADDITIONAL BMPS NEEDED; ARE BMPS IN PLACE PROPERLY INSTALLED AND MAINTAINED?
            4. INSPECT AREAS THAT HAVE BEEN DISTURBED AND ARE NOT CURRENTLY BEING WORKED. ANY UNSEEDED OR UNMULCHED BARE AREAS THAT HAVE BEEN IDLE FOR 2 WEEKS SHOULD BE NOTED.
            5. INSPECT AREAS WITH FINAL STABILIZATION. IN ORDER FOR FINAL STABILIZATION TO BE ACHIEVED, AREAS MUST HAVE A UNIFORM COVER WITH A DENSITY OF 70% OVER ENTIRE AREA. TEMPORARY BMPS SHOULD BE REMOVED AND AREAS DISTURBED BY REMOVAL SEEDED AS NECESSARY.
   E. EXIT INTERVIEW:
      1. DEBRIEF THE PERSON IN CHARGE. EXPLAIN THE IDENTIFIED DEFICIENCIES AND ANY AREAS OF CONCERN.
   F. A COPY OF THE COMPLETED INSPECTION REPORT MUST BE KEPT WITH THE SWPPP ON SITE.

      THE INSPECTION REPORT USED SHOULD INCLUDE, AT A MINIMUM, THE FOLLOWING:

      - DATE & TIME OF INSPECTION
      - NAME OF INSPECTOR(S)
      - FINDINGS OF INSPECTIONS AND RECOMMENDATIONS FOR CORRECTIVE ACTIONS
      - CORRECTIVE ACTIONS TAKEN, INCLUDING DATES, TIMES AND NAMES OF PARTY COMPLETING MAINTENANCE
      - DATE & AMOUNT OF RAINFALL
      - RECORD OF ALL POINTS OF DISCHARGE FROM THE PROPERTY AND DESCRIPTION OF DISCHARGE
      - NOTE TO UPDATE THE SWPPP

6.2 DELEGATION OF AUTHORITY

DULY AUTHORIZED REPRESENTATIVE(S) OR POSITION(S):

COMPANY OR ORGANIZATION NAME:
NAME:
POSITION:
ADDRESS:
CITY, STATE, ZIP CODE:
TELEPHONE NUMBER:
FAX/EMAIL:

6.3 CORRECTIVE ACTION LOG

THE INSPECTION/MAINTENANCE FORM, AVAILABLE UPON REQUEST, INCORPORATES BOTH INSPECTION AND MAINTENANCE REPORTING INTO A SINGLE FORM. THIS FORM ALSO SPECIFIES THE TIME ALLOWED FOR CORRECTIONS TO BE PERFORMED. IF THE PARTY PERFORMING INSPECTIONS CHOOSES TO USE ANOTHER INSPECTION FORM, A SEPARATE CORRECTIVE ACTION LOG MUST BE PROVIDED.

SECTION 7: RECORD KEEPING AND TRAINING

7.1 RECORDKEEPING

RECORD RETENTION - THE OWNER MUST KEEP THE SWPPP INCLUDING ALL CHANGES MADE TO IT DURING CONSTRUCTION (SEE SECTION 7.2), ALONG WITH THE FOLLOWING ADDITIONAL RECORDS ON FILE FOR THREE YEARS AFTER COMPLETION OF THE CONSTRUCTION PROJECT (FINAL STABILIZATION AND NOTICE OF TERMINATION):

1. ANY OTHER STORMWATER RELATED PERMITS REQUIRED FOR THE PROJECT
2. RECORDS OF ALL INSPECTIONS AND MAINTENANCE CONDUCTED DURING CONSTRUCTION
3. ALL PERMANENT OPERATION AND MAINTENANCE AGREEMENTS THAT HAVE BEEN IMPLEMENTED, INCLUDING ALL RIGHT OF WAY, CONTRACTS, COVENANTS AND OTHER BINDING REQUIREMENTS REGARDING PERPETUAL MAINTENANCE
4. ALL REQUIRED CALCULATIONS FOR DESIGN OF THE TEMPORARY AND PERMANENT STORM WATER MANAGEMENT SYSTEMS

7.2 RECORD KEEPING

THE CONTRACTOR SHALL KEEP A RECORD LOG OF ALL MODIFICATIONS TO THE SWPPP, AN EXAMPLE OF A SWPPP UPDATE LOG FORM CAN BE PROVIDED UPON REQUEST.

MODIFICATIONS TO THE SWPPP - THIS SWPPP INTENDS TO CONTROL WATER-BORNE AND LIQUID POLLUTANT DISCHARGES BY SOME COMBINATION OF INTERCEPTION, FILTRATION, AND CONTAINMENT. THE GENERAL CONTRACTOR AND SUBCONTRACTORS IMPLEMENTING THIS SWPPP MUST REMAIN ALERT TO THE NEED TO PERIODICALLY REFINE AND UPDATE THE SWPPP IN ORDER TO ACCOMPLISH THE INTENDED GOALS. THIS SWPPP MUST BE AMENDED AS NECESSARY DURING THE COURSE OF CONSTRUCTION IN ORDER TO KEEP IT CURRENT WITH THE POLLUTANT CONTROL MEASURES UTILIZED AT THE SITE. AMENDING THE SWPPP DOES NOT MEAN THAT IT HAS TO BE REPRINTED. IT IS ACCEPTABLE TO ADD ADDENDA, SKETCHES, NEW SECTIONS, AND/OR REVISED DRAWINGS. THIS SWPPP MUST BE UPDATED AS NECESSARY TO INCLUDE ADDITIONAL REQUIREMENTS, SUCH AS ADDITIONAL OR MODIFIED BMPS, DESIGNED TO CORRECT PROBLEMS IDENTIFIED OR ADDRESS SITUATIONS WHENEVER:

1. THERE IS A CHANGE IN DESIGN, CONSTRUCTION, OPERATION, MAINTENANCE, WEATHER OR SEASONAL CONDITIONS THAT HAS A SIGNIFICANT EFFECT ON THE DISCHARGE OF POLLUTANTS TO SURFACE WATERS OR UNDERGROUND WATERS.
2. INSPECTIONS OR INVESTIGATIONS BY SITE OPERATORS, LOCAL, STATE OR FEDERAL OFFICIALS INDICATE THE SWPPP IS NOT EFFECTIVE IN ELIMINATING OR SIGNIFICANTLY MINIMIZING THE DISCHARGE OF POLLUTANTS TO SURFACE WATERS OR UNDERGROUND WATERS OR THAT THE DISCHARGES ARE CAUSING WATER QUALITY STANDARD EXCEEDANCES.
3. THE SWPPP IS NOT ACHIEVING THE GENERAL OBJECTIVES OF CONTROLLING POLLUTANTS IN STORM WATER DISCHARGES ASSOCIATED WITH CONSTRUCTION ACTIVITY, OR THE SWPPP IS NOT CONSISTENT WITH THE TERMS AND CONDITIONS OF THE GENERAL PERMIT.
4. THE MPCA HAS DETERMINED THAT THE PROJECT'S STORM WATER DISCHARGES MAY CAUSE OR CONTRIBUTE TO NON-ATTAINMENT OF ANY APPLICABLE WATER STANDARD, OR THAT THE SWPPP DOES NOT INCORPORATE REQUIREMENTS RELATED TO AN APPROVED TOTAL MAXIMUM DAILY LOAD (TMDL) IMPLEMENTATION PLAN. IN THIS CASE, THE SWPPP MUST BE UPDATED OR A SUPPLEMENTAL BMP ACTION PLAN DEVELOPED TO ADDRESS THE IDENTIFIED CONCERNS.

7.3 TRAINING

THE PERMITTEE(S) MUST FULFILL TRAINING REQUIREMENTS AND INCLUDE RECORDS OF TRAINING IN THE SWPPP. REFRESHER TRAINING MUST BE ATTENDED EVERY THREE YEARS STARTING THREE YEARS, FROM THE ISSUANCE OF THE 2013 GENERAL PERMIT (ISSUED 8/1/13). INDIVIDUALS REQUIRED TO BE TRAINED INCLUDE:

1. INDIVIDUALS PREPARING THE SWPPP
2. INDIVIDUALS OVERSEEING IMPLEMENTATION OF, REVISING, AND AMENDING THE SWPPP AND INDIVIDUALS PERFORMING INSPECTIONS. ONE OF THESE INDIVIDUALS MUST BE AVAILABLE FOR AN ON SITE INSPECTION WITHIN 72 HOURS UPON REQUEST BY THE MPCA.
3. INDIVIDUALS PERFORMING OR SUPERVISING THE INSTALLATION, MAINTENANCE AND REPAIR OF BMPS. AT LEAST ONE INDIVIDUAL ON A PROJECT MUST BE TRAINED IN THESE JOB DUTIES.

THE CONTENT AND EXTENT OF TRAINING MUST BE COMMENSURATE WITH THE INDIVIDUAL'S JOB DUTIES AND RESPONSIBILITIES WITH REGARD TO ACTIVITIES COVERED UNDER THE GENERAL PERMIT. AT LEAST ONE INDIVIDUAL TRAINED IN THE JOB DUTIES LISTED ABOVE MUST BE PRESENT ON THE SITE OR AVAILABLE TO THE SITE IN 72 HOURS.

TRAINING DOCUMENTATION MUST INCLUDE:

1. NAMES OF PERSONNEL ASSOCIATED WITH THE PROJECT THAT ARE REQUIRED TO BE TRAINED
2. DATES OF TRAINING AND NAMES OF INSTRUCTOR AND ENTITY PROVIDING TRAINING
3. CONTENT OF TRAINING COURSE, INCLUDING NUMBER OF HOURS OF TRAINING
4. DOCUMENTATION MUST BE KEPT WITH THE SWPPP. TRAINING RECORD/CERTIFICATION TEMPLATE IS AVAILABLE UPON REQUEST.

INDIVIDUALS MUST BE TRAINED BY LOCAL, STATE, FEDERAL AGENCIES, PROFESSIONAL ORGANIZATIONS, OR OTHER ENTITIES WITH EXPERTISE IN EROSION PREVENTION, SEDIMENT CONTROL, OR PERMANENT STORMWATER MANAGEMENT SUCH AS THE UNIVERSITY OF MINNESOTA, MINNESOTA EROSION CONTROL ASSOCIATION, SOIL AND WATER CONSERVATION DISTRICTS, OR THE MPCA.

SECTION 8: FINAL STABILIZATION

FINAL STABILIZATION - TO ACHIEVE FINAL STABILIZATION OF THE SITE, THE CONTRACTOR WILL IMPLEMENT THE FOLLOWING MEASURES AFTER ALL SOIL DISTURBING ACTIVITIES AT THE SITE HAVE BEEN COMPLETED.

1. ALL SOILS MUST BE STABILIZED BY A UNIFORM PERENNIAL VEGETATIVE COVER WITH A DENSITY OF 70 PERCENT OVER THE ENTIRE PERVIOUS SURFACE AREA, OR BY OTHER EQUIVALENT MEANS NECESSARY TO PREVENT SOIL FAILURE UNDER EROSIVE CONDITIONS. REFER TO LANDSCAPING PLANS/SPECIFICATIONS FOR TYPE OF VEGETATIVE COVER.
2. THE PERMANENT STORMWATER MANAGEMENT SYSTEM IS CONSTRUCTED, MEETS ALL REQUIREMENTS IN PART III.D. OF THE GENERAL PERMIT AND IS OPERATING AS DESIGNED. TEMPORARY OR PERMANENT SEDIMENTATION BASINS THAT ARE TO BE USED AS PERMANENT WATER QUALITY MANAGEMENT BASINS HAVE BEEN CLEAN OF ANY ACCUMULATED SEDIMENT. ALL SEDIMENT HAS BEEN REMOVED FROM CONVEYANCE SYSTEMS AND DITCHES ARE STABILIZED WITH PERMANENT COVER. [MODIFY THIS ITEM TO BE SITE SPECIFIC - DELETE REFERENCES TO PERMANENT OR TEMPORARY SEDIMENTATION BASINS IF NONE ARE DESIGNED]
3. ALL TEMPORARY EROSION PREVENTION AND SEDIMENT CONTROL BMPS MUST BE REMOVED.
4. FOR CONSTRUCTION PROJECTS ON LAND USED FOR AGRICULTURAL PURPOSES FINAL STABILIZATION MAY BE ACCOMPLISHED BY RETURNING THE DISTURBED LAND TO ITS PRECONSTRUCTION AGRICULTURAL USE.

Sambatek
www.sambatek.com
12800 Whitewater Drive, Suite 300
Minnetonka, MN 55343
763.476.6010 telephone
763.476.8532 facsimile
Engineering | Surveying | Planning | Environmental

Client
SHAKOPEE CROSSINGS LIMITED PARTNERSHIP
8170 CARRIAGE COURT NORTH
SUITE 210
SHAKOPEE, MN 55379

Project
SOUTHBRIDGE CROSSINGS EAST 5TH ADDITION

Location
SHAKOPEE, MN

Certification
I hereby certify that this plan, specification or report was prepared by me or under my direct supervision and that I am a duly licensed professional ENGINEER under the laws of the state of Minnesota.

George D. Abernathy
Registration No. 43505 Date: 10/19/2018

If applicable, contact us for a wet signed copy of this plan which is available upon request at Sambatek's, Minnetonka, MN office.

Summary
Designed: GDA Drawn: JMW
Approved: BDB Book / Page:
Phase: PERMIT Initial Issued: 10/19/2018

Revision History

No.	Date	By	Submittal / Revision
A	10/19/18	JMW	Building Revisions

Sheet Title
SWPPP NARRATIVE

Sheet No. Revision
C5.05 A

Project No. 20787

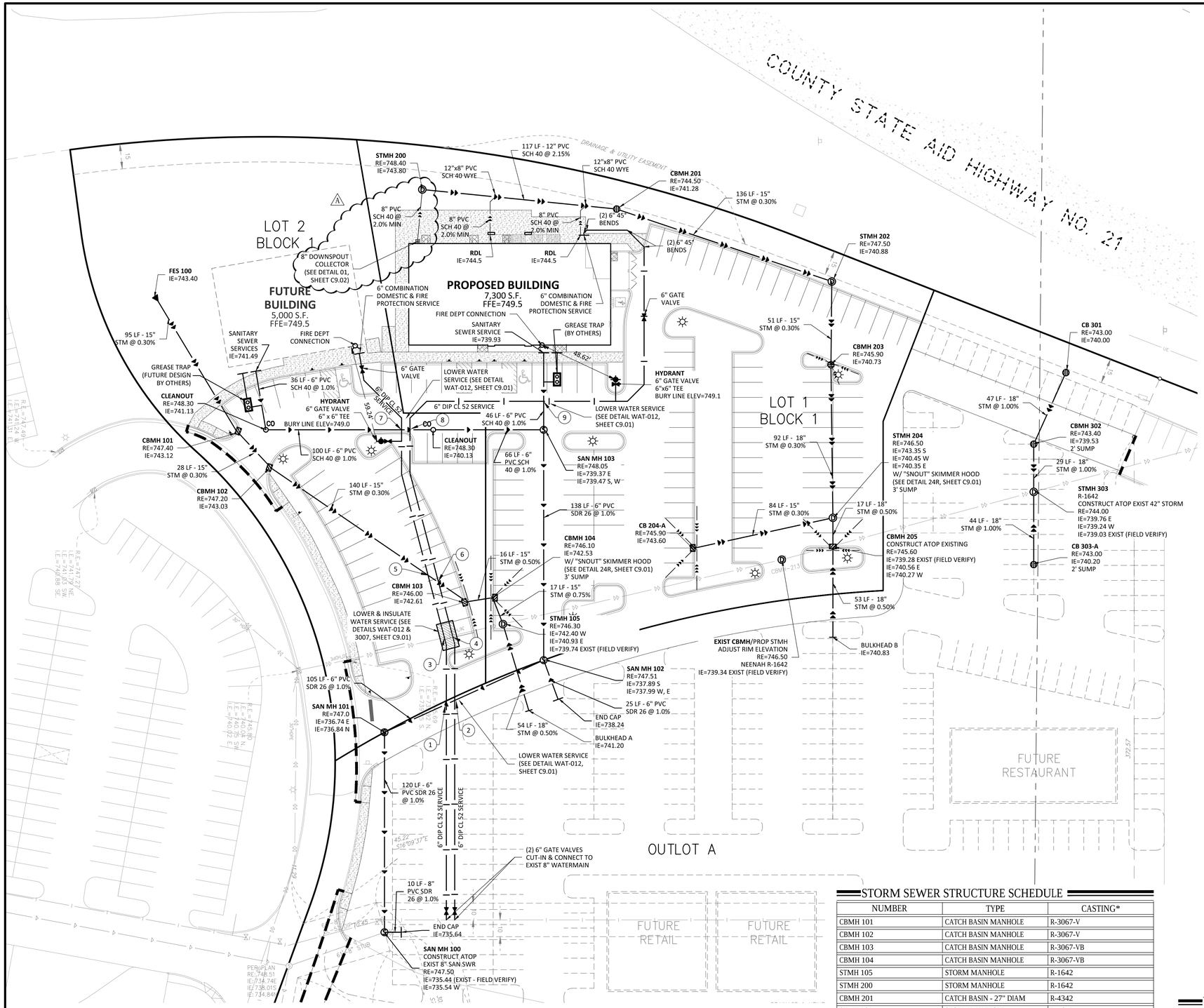

LEGEND

	PROPOSED	EXISTING
CURB & GUTTER		
STORM SEWER	D	D
SANITARY SEWER	S	S
WATERMAIN	W	W
EASEMENT		
DRAINTILE		
GAS LINE	GL	GL
ELECTRIC	UE	UE
TELEPHONE	UT	UT
LOWER & INSULATE		
LIGHT POLE		

UTILITY CONSTRUCTION NOTES

1. THE UTILITY IMPROVEMENTS FOR THIS PROJECT SHALL BE CONSTRUCTED IN ACCORDANCE WITH THE "STANDARD UTILITIES SPECIFICATIONS" AS PUBLISHED BY THE CITY ENGINEERS ASSOCIATION OF MINNESOTA (CEAM), EXCEPT AS MODIFIED HEREIN. CONTRACTOR SHALL OBTAIN A COPY OF THESE SPECIFICATIONS.
   - 1.1. ALL UTILITIES SHALL BE CONSTRUCTED IN ACCORDANCE WITH CITY OF SHAKOPEE AND SHAKOPEE PUBLIC UTILITIES (OR SPU) REQUIREMENTS.
   - 1.2. CONTRACTOR SHALL NOT OPEN, TURN OFF, INTERFERE WITH, OR ATTACH ANY PIPE OR HOSE TO OR TAP WATERMAIN BELONGING TO THE CITY UNLESS DULY AUTHORIZED TO DO SO BY THE CITY. ANY ADVERSE CONSEQUENCES OF ANY SCHEDULED OR UNSCHEDULED DISRUPTIONS OF SERVICE TO THE PUBLIC ARE THE LIABILITY OF CONTRACTOR.
   - 1.3. A MINIMUM VERTICAL SEPARATION OF 3 FEET FOR STORM SEWER IS REQUIRED.
   - 1.4. A MINIMUM VERTICAL SEPARATION OF 18 INCHES, AND A HORIZONTAL SEPARATION OF 10-FEET BETWEEN OUTSIDE PIPE DIAMETERS, IS REQUIRED AT ALL WATERMAIN AND SEWER MAIN (BUILDING, STORM AND SANITARY) CROSSINGS.
   - 1.5. ALL HYDRANTS MUST BE PLACED 7.5 FEET BACK OF CURB UNLESS OTHERWISE APPROVED BY SPU AND ADEQUATELY PROTECTED. ALL HYDRANTS MUST BE INSTALLED WITH THE FINISH GRADE AT THE BURY LINE OF THE HYDRANT. NO HYDRANT EXTENSIONS WILL BE ALLOWED OR ACCEPTED.
2. ALL MATERIALS SHALL BE AS SPECIFIED IN CEAM SPECIFICATIONS EXCEPT AS MODIFIED HEREIN.
   - 2.1. ALL MATERIALS SHALL COMPLY WITH THE REQUIREMENTS OF THE CITY OF SHAKOPEE AND SHAKOPEE PUBLIC UTILITIES (OR SPU).
   - 2.2. ALL SANITARY SEWER TO BE PVC SDR-26 CONFORMING TO ASTM D2241, UNLESS NOTED OTHERWISE.
     - 2.2.1. ALL SANITARY SEWER SERVICES TO BUILDING SHALL BE PVC SCH 40 CONFORMING TO ASTM D2665.
   - 2.3. ALL WATERMAIN TO BE DUCTILE IRON - CLASS 52 CONFORMING TO AWWA C104 & C151, UNLESS NOTED OTHERWISE.
     - 2.3.1. ALL WATERMAIN TO HAVE 7.5-FEET OF COVER OVER TOP OF WATERMAIN.
     - 2.3.2. PROVIDE THRUST BLOCKING AND MECHANICAL JOINT RESTRAINTS ON ALL WATERMAIN JOINTS PER CITY STANDARDS.
   - 2.4. ALL STORM SEWER PIPE TO BE SMOOTH INTERIOR DUAL WALL HDPE PIPE WITH WATER TIGHT GASKETS CONFORMING TO ASTM F2306, UNLESS NOTED OTHERWISE.
     - 2.4.1. ALL STORM SEWER PIPE FOR ROOF DRAIN SERVICES TO BUILDING SHALL BE PVC SCH 40 CONFORMING TO ASTM D2665.
     - 2.4.2. STORM SEWER PIPE LENGTHS INCLUDE FES.
     - 2.4.3. RIP RAP SHALL BE IN ACCORDANCE WITH CITY STANDARD PLATE 4010 (SHEET C9.03.)
3. COORDINATE ALL BUILDING SERVICE CONNECTION LOCATIONS AND INVERT ELEVATIONS WITH MECHANICAL CONTRACTOR PRIOR TO CONSTRUCTION.
4. ALL BUILDING SERVICE CONNECTIONS (STORM, SANITARY, WATER) WITH FIVE FEET OR LESS COVER ARE TO BE INSULATED FROM BUILDING TO POINT WHERE 5-FEET OF COVER IS ACHIEVED.
5. CONTRACTOR SHALL TAKE ALL PRECAUTIONS NECESSARY TO AVOID PROPERTY DAMAGE TO ADJACENT PROPERTIES DURING THE CONSTRUCTION PHASES OF THIS PROJECT. CONTRACTOR WILL BE HELD SOLELY RESPONSIBLE FOR ANY DAMAGES TO THE ADJACENT PROPERTIES OCCURRING DURING THE CONSTRUCTION PHASES OF THIS PROJECT.
6. SAFETY NOTICE TO CONTRACTORS: IN ACCORDANCE WITH GENERALLY ACCEPTED CONSTRUCTION PRACTICES, CONTRACTOR WILL BE SOLELY AND COMPLETELY RESPONSIBLE FOR CONDITIONS ON THE JOB SITE, INCLUDING SAFETY OF ALL PERSONS AND PROPERTY DURING PERFORMANCE OF THE WORK. THIS REQUIREMENT WILL APPLY CONTINUOUSLY AND NOT BE LIMITED TO NORMAL WORKING HOURS. THE DUTY OF THE ENGINEER OR THE DEVELOPER TO CONDUCT CONSTRUCTION REVIEW OF CONTRACTOR'S PERFORMANCE IS NOT INTENDED TO INCLUDE REVIEW OF THE ADEQUACY OF CONTRACTOR'S SAFETY MEASURES IN, ON OR NEAR THE CONSTRUCTION SITE.
7. ALL AREAS OUTSIDE THE PROPERTY BOUNDARIES THAT ARE DISTURBED BY UTILITY CONSTRUCTION SHALL BE RESTORED IN KIND. SODDED AREAS SHALL BE RESTORED WITH 6 INCHES OF TOPSOIL PLACED BENEATH THE SOD.
8. CONTRACTOR SHALL BE RESPONSIBLE FOR PROVIDING AND MAINTAINING TRAFFIC CONTROL DEVICES SUCH AS BARRICADES, WARNING SIGNS, DIRECTIONAL SIGNS, FLAGMEN AND LIGHTS TO CONTROL THE MOVEMENT OF TRAFFIC WHERE NECESSARY. TRAFFIC CONTROL DEVICES SHALL CONFORM TO APPROPRIATE MINNESOTA DEPARTMENT OF TRANSPORTATION STANDARDS.
9. ALL SOILS TESTING SHALL BE COMPLETED BY AN INDEPENDENT SOILS ENGINEER. EXCAVATION FOR THE PURPOSE OF REMOVING UNSTABLE OR UNSUITABLE SOILS SHALL BE COMPLETED AS REQUIRED BY THE SOILS ENGINEER. THE UTILITY BACKFILL CONSTRUCTION SHALL COMPLY WITH THE REQUIREMENTS OF THE SOILS ENGINEER. CONTRACTOR SHALL BE RESPONSIBLE FOR COORDINATING ALL REQUIRED SOILS TESTS AND SOIL INSPECTIONS WITH THE SOILS ENGINEER.

   A GEOTECHNICAL ENGINEERING REPORT HAS BEEN COMPLETED BY:

   COMPANY: BRAUN INTERTEC
   ADDRESS: 11001 HAMPSHIRE AVE S, MPLS, MN 55438
   PHONE: 952-995-2000
   DATED: OCTOBER 11, 2017

   CONTRACTOR SHALL OBTAIN A COPY OF THIS SOILS REPORT.
10. CONTRACTOR SHALL SUBMIT 2 COPIES OF SHOP DRAWINGS FOR MANHOLE AND CATCH BASIN STRUCTURES TO SAMBATEK, INC.. CONTRACTOR SHALL ALLOW 5 WORKING DAYS FOR SHOP DRAWING REVIEW.
11. CONTRACTOR AND MATERIAL SUPPLIER SHALL DETERMINE THE MINIMUM DIAMETER REQUIRED FOR EACH STORM SEWER STRUCTURE.

STORM SEWER STRUCTURE SCHEDULE

NUMBER	TYPE	CASTING*
CBMH 101	CATCH BASIN MANHOLE	R-3067-V
CBMH 102	CATCH BASIN MANHOLE	R-3067-V
CBMH 103	CATCH BASIN MANHOLE	R-3067-VB
CBMH 104	CATCH BASIN MANHOLE	R-3067-VB
STMH 105	STORM MANHOLE	R-1642
STMH 200	STORM MANHOLE	R-1642
CBMH 201	CATCH BASIN - 27" DIAM	R-4342
STMH 202	STORM MANHOLE	R-1642
CBMH 203	CATCH BASIN MANHOLE	R-1878-B7G
STMH 204	STORM MANHOLE	R-1642
CB 204-A	CATCH BASIN - 2'X3'	R-3067-VB
CBMH 205	CATCH BASIN MANHOLE	R-3067-VB
CB 301	CATCH BASIN - 27" DIAM	R-4342
CBMH 302	CATCH BASIN MANHOLE	R-4342
STMH 303	STORM MANHOLE	R-1642
CB 303-A	CATCH BASIN	R-4342

*INDICATES NEENAH FOUNDRY CASTING NO., OR APPROVED EQUAL

NOTE: CONTRACTOR AND THEIR SUPPLIER SHALL DETERMINE THE MINIMUM DIAMETER REQUIRED FOR EACH STORM SEWER STRUCTURE.

UTILITY CROSSINGS

NUMBER	6" WATER SERVICE	6" SANITARY	STORM	SEPARATION
1	735.75 TOP OF PIPE	737.25 BOT OF PIPE		18"
2	735.75 TOP OF PIPE	737.31 BOT OF PIPE		19"
3	735.75 TOP OF PIPE		739.82 BOT OF PIPE	49"
4	735.75 TOP OF PIPE		739.80 BOT OF PIPE	49"
5	739.20 TOP OF PIPE		742.70 BOT OF PIPE	42"
6	739.05 TOP OF PIPE		742.67 BOT OF PIPE	43"
7	738.82 TOP OF PIPE	740.32 BOT OF PIPE		18"
8	738.77 TOP OF PIPE	740.27 BOT OF PIPE		18"
9	738.14 TOP OF PIPE	739.64 BOT OF PIPE		18"
10		738.37 BOT OF PIPE	739.68 BOT OF PIPE	10"

APPROVED FOR ONE YEAR FROM THIS DATE

SHAKOPEE PUBLIC UTILITIES COMMISSION — DATE

All materials and construction methods shall comply with Shakopee Public Utilities per water policy manual dtd August 04, 2014.

NORTH

0 30 60

SCALE IN FEET

THE SUBSURFACE UTILITY INFORMATION SHOWN ON THESE PLANS IS A UTILITY QUALITY LEVEL D. THIS QUALITY LEVEL WAS DETERMINED ACCORDING TO THE GUIDELINES OF ASCE/CI 38-02, TITLED "STANDARD GUIDELINES FOR THE COLLECTION AND DEPICTION OF EXISTING SUBSURFACE UTILITY DATA." THE CONTRACTOR AND/OR SUBCONTRACTORS SHALL DETERMINE THE EXACT LOCATION OF ALL EXISTING UTILITIES BEFORE COMMENCING WORK, BY CONTACTING THE NOTIFICATION CENTER (GOPHER STATE ONE FOR MINNESOTA). THE CONTRACTOR AND/OR SUBCONTRACTOR AGREE TO BE FULLY RESPONSIBLE FOR ANY AND ALL DAMAGES, WHICH MIGHT BE OCCASIONED BY HIS OR HER FAILURE TO EXACTLY LOCATE AND PRESERVE ANY AND ALL UTILITIES (UNDERGROUND AND OVERHEAD).

IF THE CONTRACTOR ENCOUNTERS ANY DRAIN TILE WITHIN THE SITE, HE OR SHE SHALL NOTIFY THE ENGINEER WITH THE LOCATION, SIZE, INVERT AND IF THE TILE LINE IS ACTIVE. NO DRAIN TILE SHALL BE BACKFILLED WITHOUT APPROVAL FROM THE PROJECT ENGINEER.

IT SHALL BE THE RESPONSIBILITY OF THE CONTRACTOR TO RELOCATE ALL EXISTING UTILITIES WHICH CONFLICT WITH THE PROPOSED IMPROVEMENTS SHOWN ON THE PLANS.

Sambatek
www.sambatek.com
12800 Whitewater Drive, Suite 300
Minnetonka, MN 55343
763.476.6010 telephone
763.476.8532 facsimile
Engineering | Surveying | Planning | Environmental

Client

SHAKOPEE CROSSINGS LIMITED PARTNERSHIP

8170 CARRIAGE COURT NORTH
SUITE 210
SHAKOPEE, MN 55379

Project

SOUTHBRIDGE CROSSINGS EAST 5TH ADDITION

Location

SHAKOPEE, MN

Certification

I hereby certify that this plan, specification or report was prepared by me or under my direct supervision and that I am a duly licensed professional ENGINEER under the laws of the state of Minnesota.

George D. Abernathy
Registration No. 43505 Date: 10/19/2018

If applicable, contact us for a wet signed copy of this plan which is available upon request at Sambatek's, Minnetonka, MN office.

Summary

Designed: GDA Drawn: JMW
Approved: BDB Book / Page:
Phase: PERMIT Initial Issued: 10/19/2018

Revision History

No.	Date	By	Submittal / Revision
A	10/19/18	JMW	Building Revisions

Sheet Title

UTILITY PLAN

Sheet No. Revision

C6.01 A

Project No. 20787

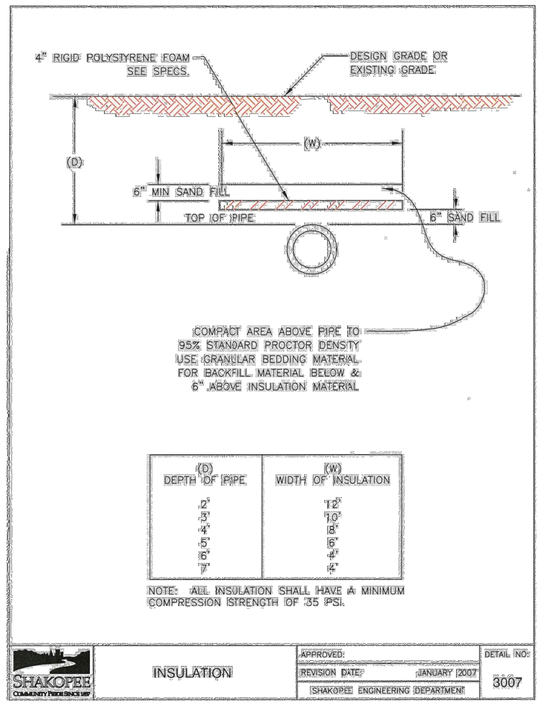

(D) DEPTH OF PIPE	(W) WIDTH OF INSULATION
2'	12"
3'	10"
4'	8"
5'	6"
6'	4"
7'	4"

NOTE: ALL INSULATION SHALL HAVE A MINIMUM COMPRESSION STRENGTH OF 35 PSI.

SHAKOPEE COMMUNITY PRIDE SINCE 1857	INSULATION	APPROVED:
		REVISION DATE: JANUARY 2007
		SHAKOPEE ENGINEERING DEPARTMENT
		DETAIL NO: 3007

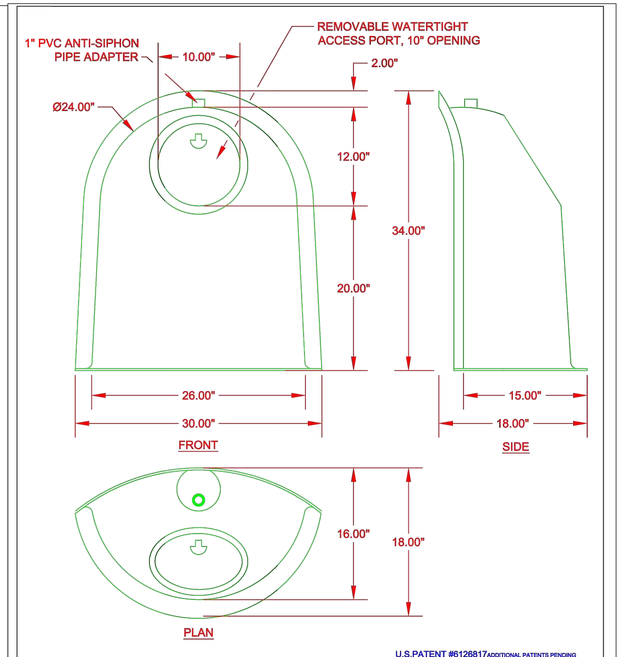

DESIGNED TO FIT
48"-60" DIAM.
STRUCTURES

U.S.PATENT #6126817 ADDITIONAL PATENTS PENDING

BMP, INC. 53 MT. ARCHER ROAD, LYME, CT. 06371 (800) 504-8008 FAX: (860)434-3195		
DESCRIPTION: 24R SNOUT OIL & DEBRIS STOP	DATE: 09/13/99	SCALE: NONE
	DRAWING NUMBER: 24R	

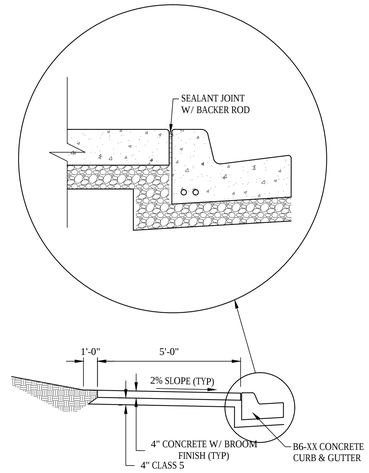

01 N.T.S. CONCRETE SIDEWALK SECTION BEHIND CURB & GUTTER

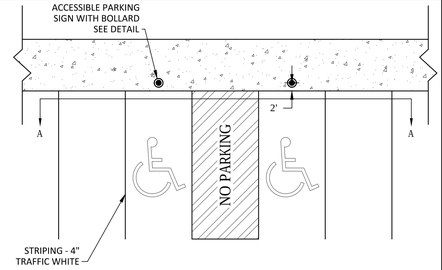

PLAN VIEW OF ADA PARKING

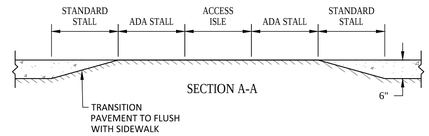

05 N.T.S. ADA PARKING

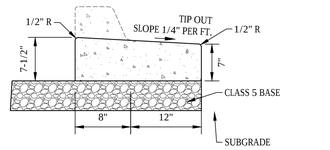

02 N.T.S. B612 FLAT CURB & GUTTER

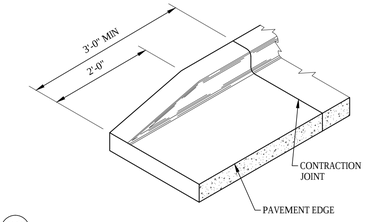

03 N.T.S. END SECTION CURB & GUTTER

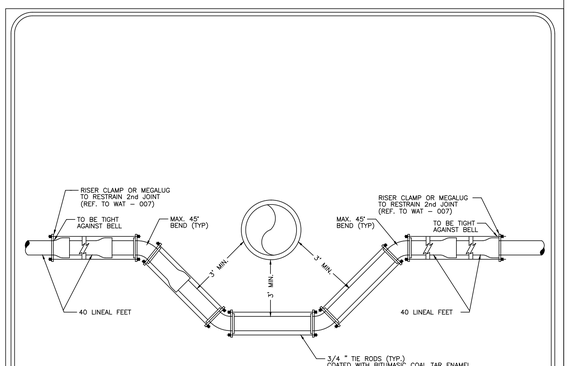

NOTE: 6"-10"DIA. PIPE 2 RODS
12" DIA. & LARGER TO HAVE 4 RODS
MEGALUGS MAY BE USED IN LIEU OF RODS
(REF. TO WAT-007)
COPPER STRAPS AROUND
ALL EPOXY FITTINGS

WATERMAIN OFFSET DETAIL
NO SCALE

Shakopee Public Utilities	Shakopee Public Utilities Commission Details For Watermain Construction	WAT - 012

ADOPTED		REV.		DESIGN	
SPUC	DATE	APP'D	DRAWN	RRM	
RES. # 1075			APP'D	JDA	
08-04-14					

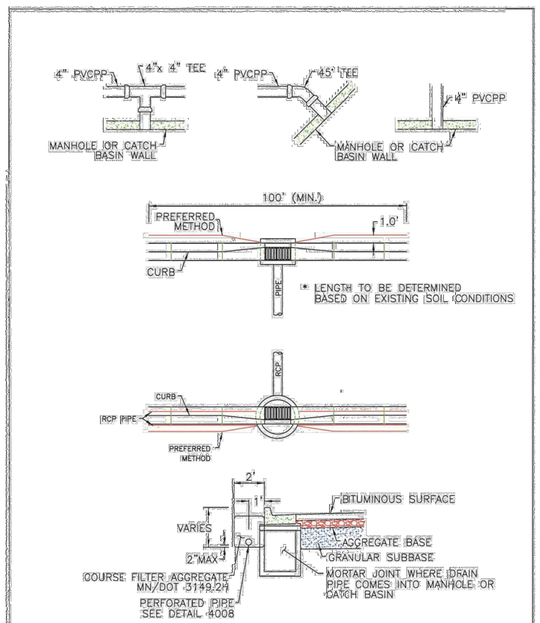

SHAKOPEE COMMUNITY PRIDE SINCE 1857	PERFORATED DRAINTILE	APPROVED:
		REVISION DATE: MAY 2010
		SHAKOPEE ENGINEERING DEPARTMENT
		DETAIL NO: 4007

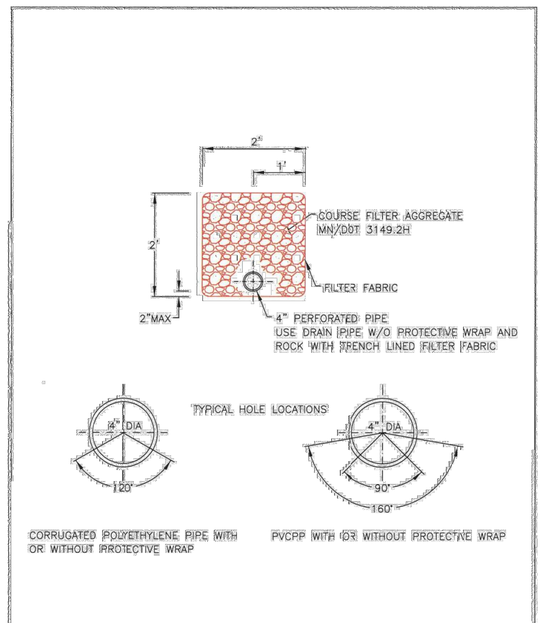

SHAKOPEE COMMUNITY PRIDE SINCE 1857	PERFORATED DRAINTILE	APPROVED:
		REVISION DATE: JANUARY 2307
		SHAKOPEE ENGINEERING DEPARTMENT
		DETAIL NO: 4008

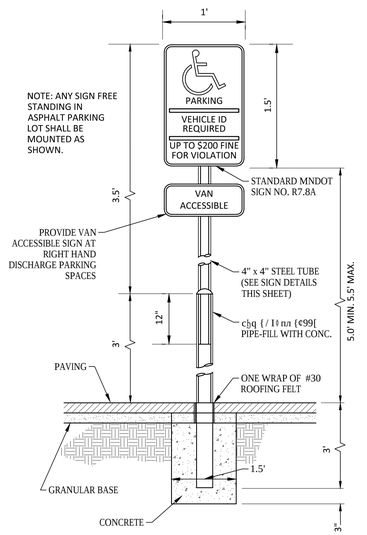

04 N.T.S. ACCESSIBLE PARKING SIGN

Sambatek
www.sambatek.com
12800 Whitewater Drive, Suite 300
Minnetonka, MN 55343
763.476.6010 telephone
763.476.8532 facsimile
Engineering | Surveying | Planning | Environmental

Client
SHAKOPEE CROSSINGS LIMITED PARTNERSHIP
8170 CARRIAGE COURT NORTH
SUITE 210
SHAKOPEE, MN 55379

Project
SOUTHBRIDGE CROSSINGS EAST 5TH ADDITION

Location
SHAKOPEE, MN

Certification
I hereby certify that this plan, specification or report was prepared by me or under my direct supervision and that I am a duly licensed professional ENGINEER under the laws of the state of Minnesota.

George D. Abernathy
Registration No. 43505 Date: 10/19/2018

If applicable, contact us for a wet signed copy of this plan which is available upon request at Sambatek's, Minnetonka, MN office.

Summary
Designed: GDA Drawn: JMW
Approved: BDB Book / Page:
Phase: PERMIT Initial Issued: 10/19/2018

Revision History
No.	Date	By	Submittal / Revision
A	10/19/18	JMW	Building Revisions

Sheet Title
DETAILS

Sheet No. Revision
C9.01 A

Project No.
20787

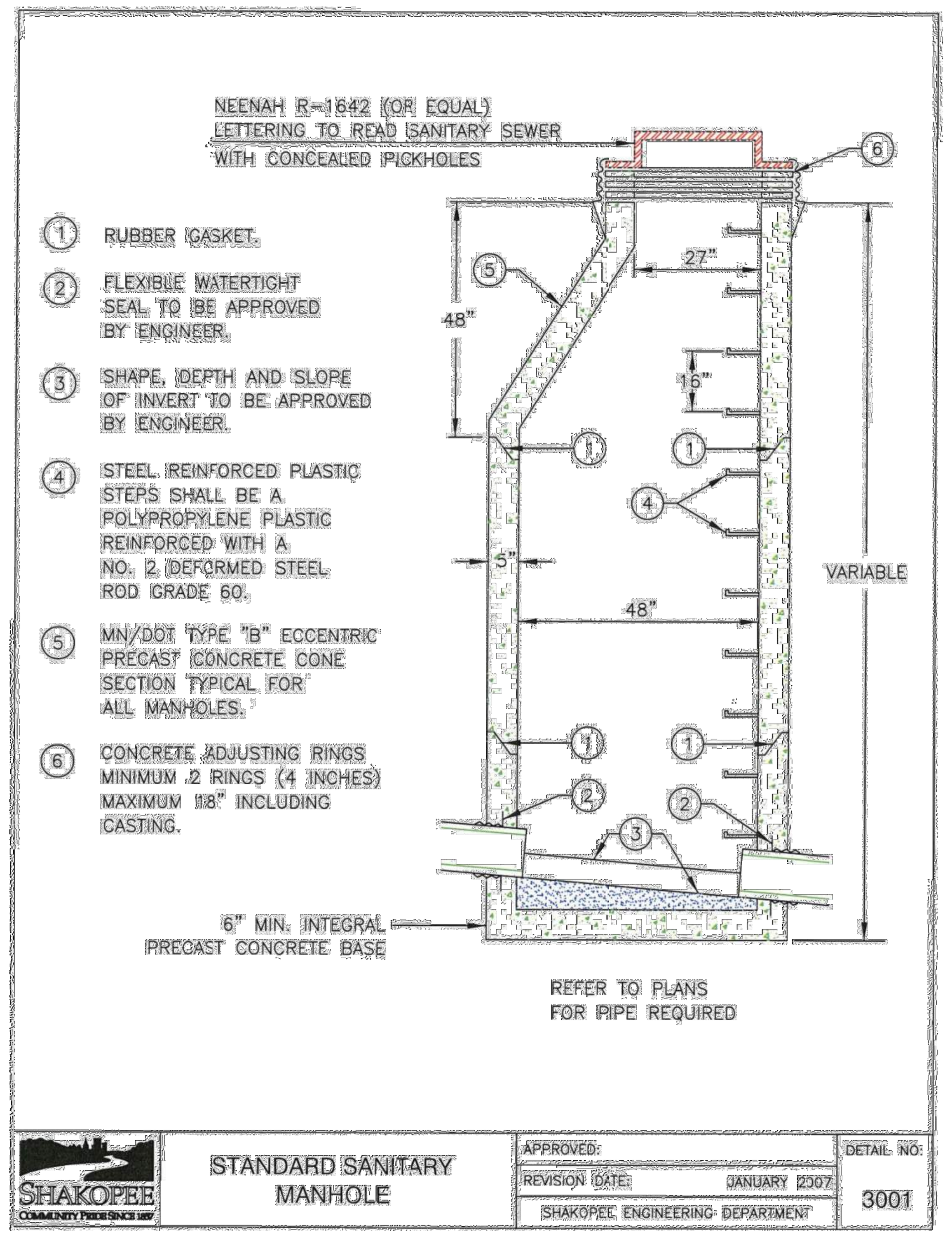

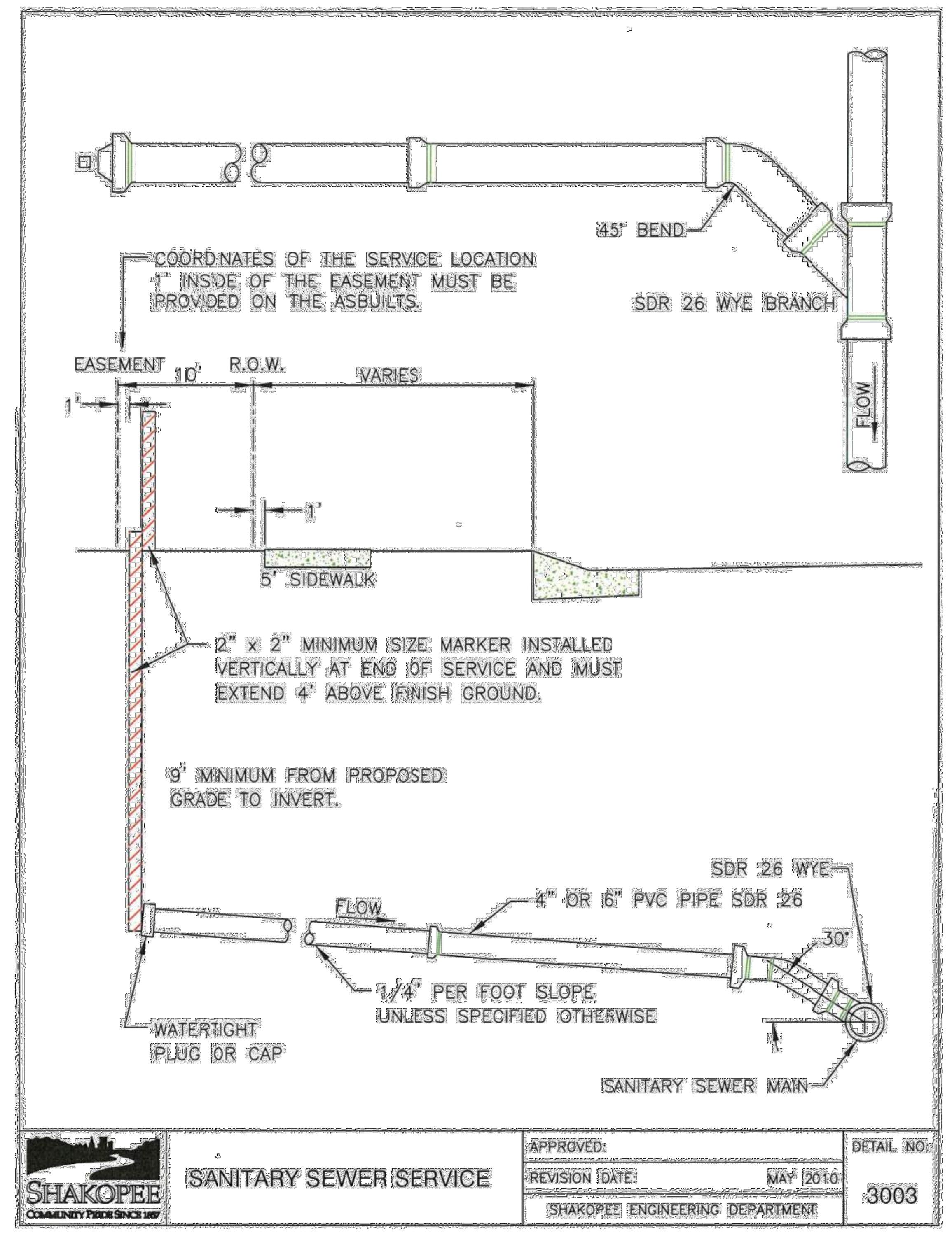

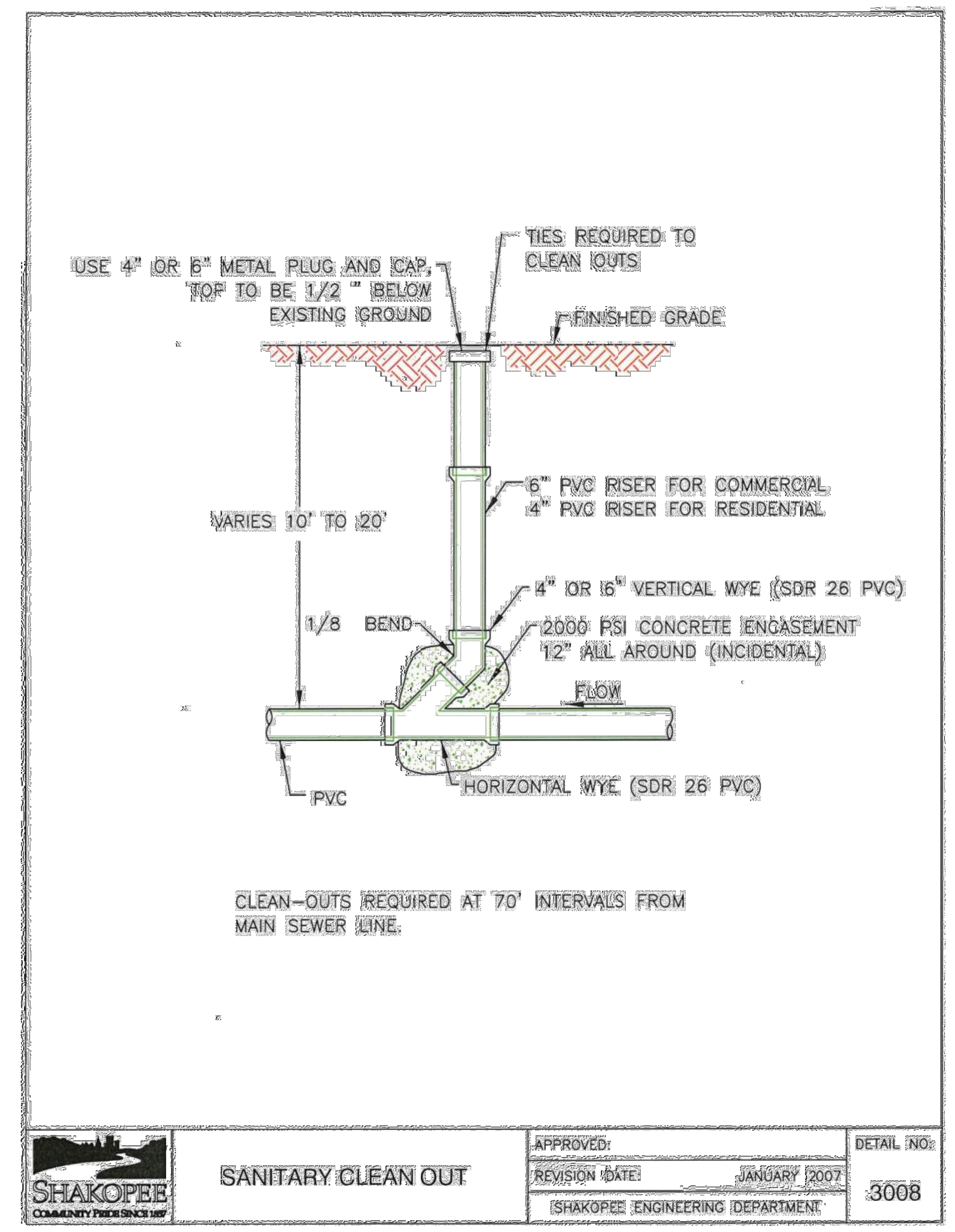

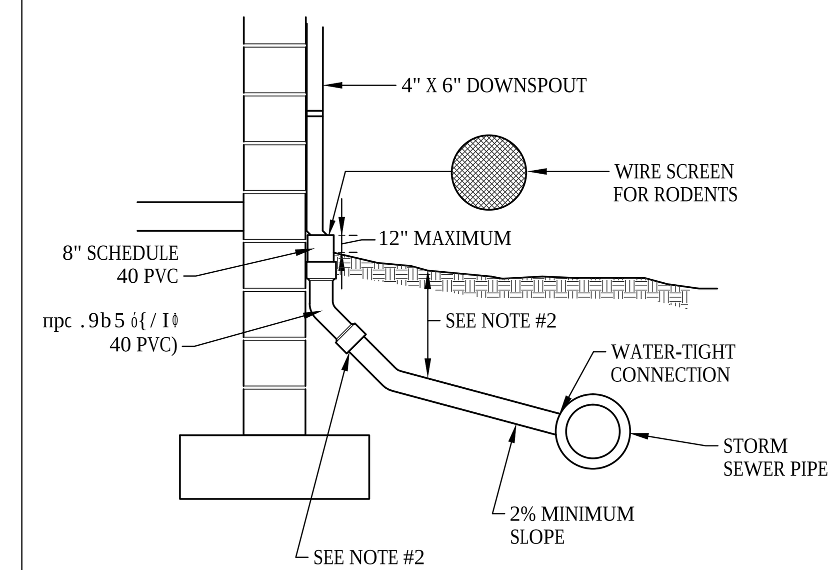

NOTES:

1. FOR ALL DEPTHS OF COVER LESS THAN TWO (2) FEET, PIPE MUST BE SCHEDULE 40 PVC. FOR DEPTHS OF COVER GREATER THAN TWO (2) FEET, FLEXIBLE PIPE MAY BE USED. REFER TO SPECIFICATIONS FOR ALLOWABLE PIPE TYPES.
2. A WATER-TIGHT CONNECTION SHALL BE MAINTAINED WITH ANY TRANSITION FROM SCHEDULE 40 PVC PIPE TO ANY OTHER PIPE TYPE.
3. THE DOWNSPOUT COLLECTOR DRAIN SHALL BE INSTALLED BEFORE THE DOWNSPOUTS ARE INSTALLED ON THE BUILDING. SITEWORK CONTRACTOR SHALL BE RESPONSIBLE FOR ALL WORK TO, AND INCLUDING, THE RODENT SCREEN. BUILDING CONTRACTOR SHALL BE RESPONSIBLE FOR THE CONNECTION AT THE POINT OF THE RODENT SCREEN.

01 DOWNSPOUT COLLECTOR
N.T.S.

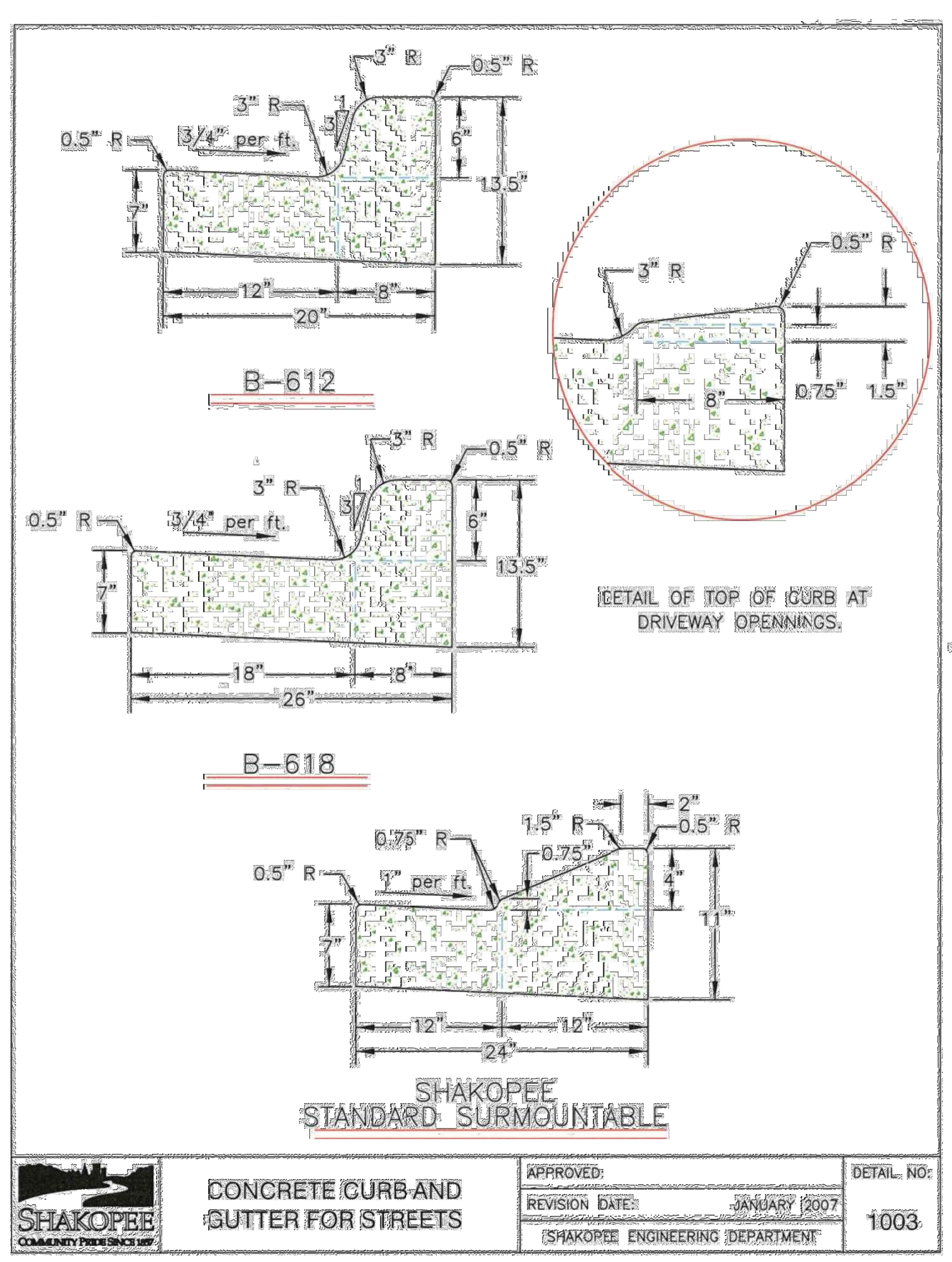

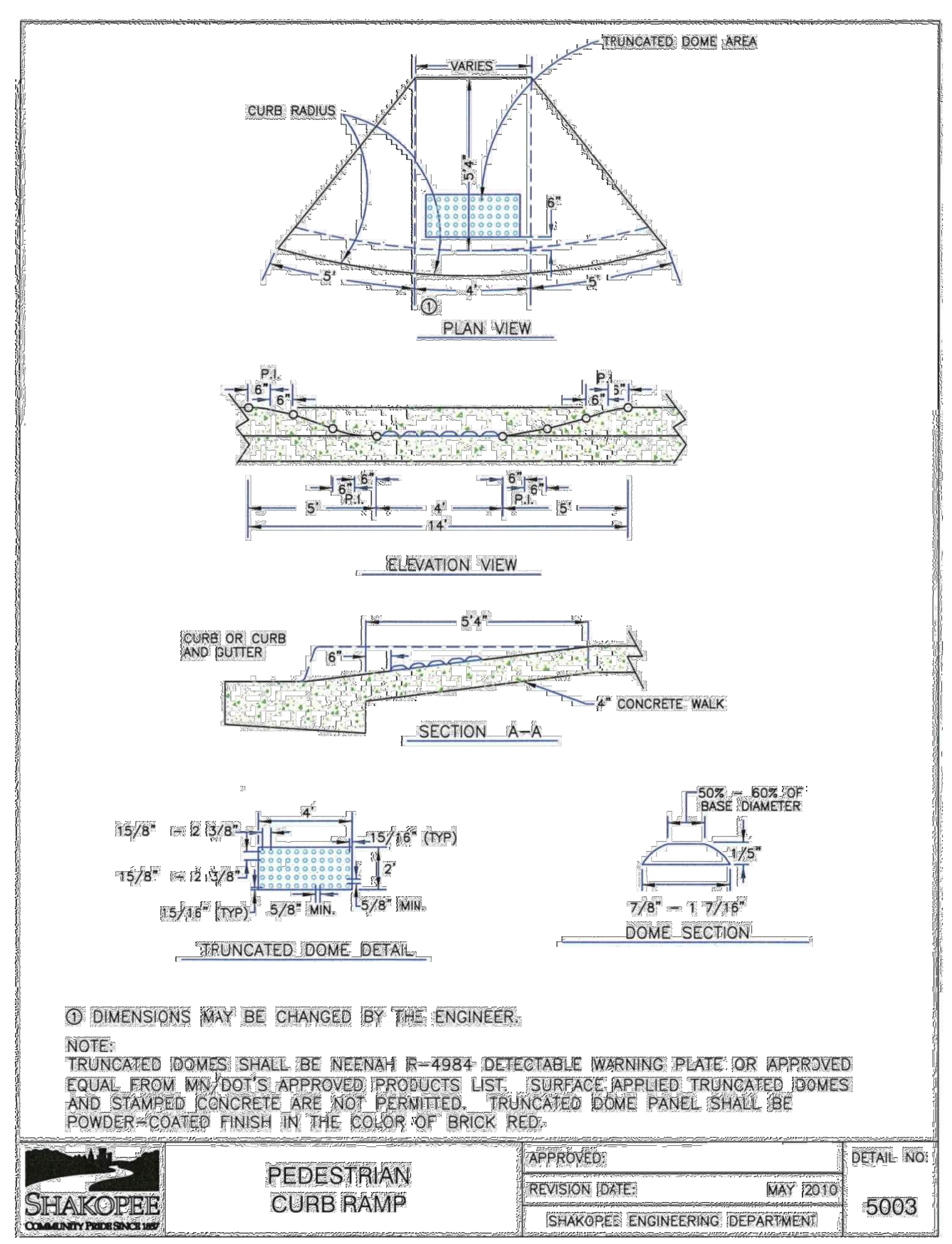

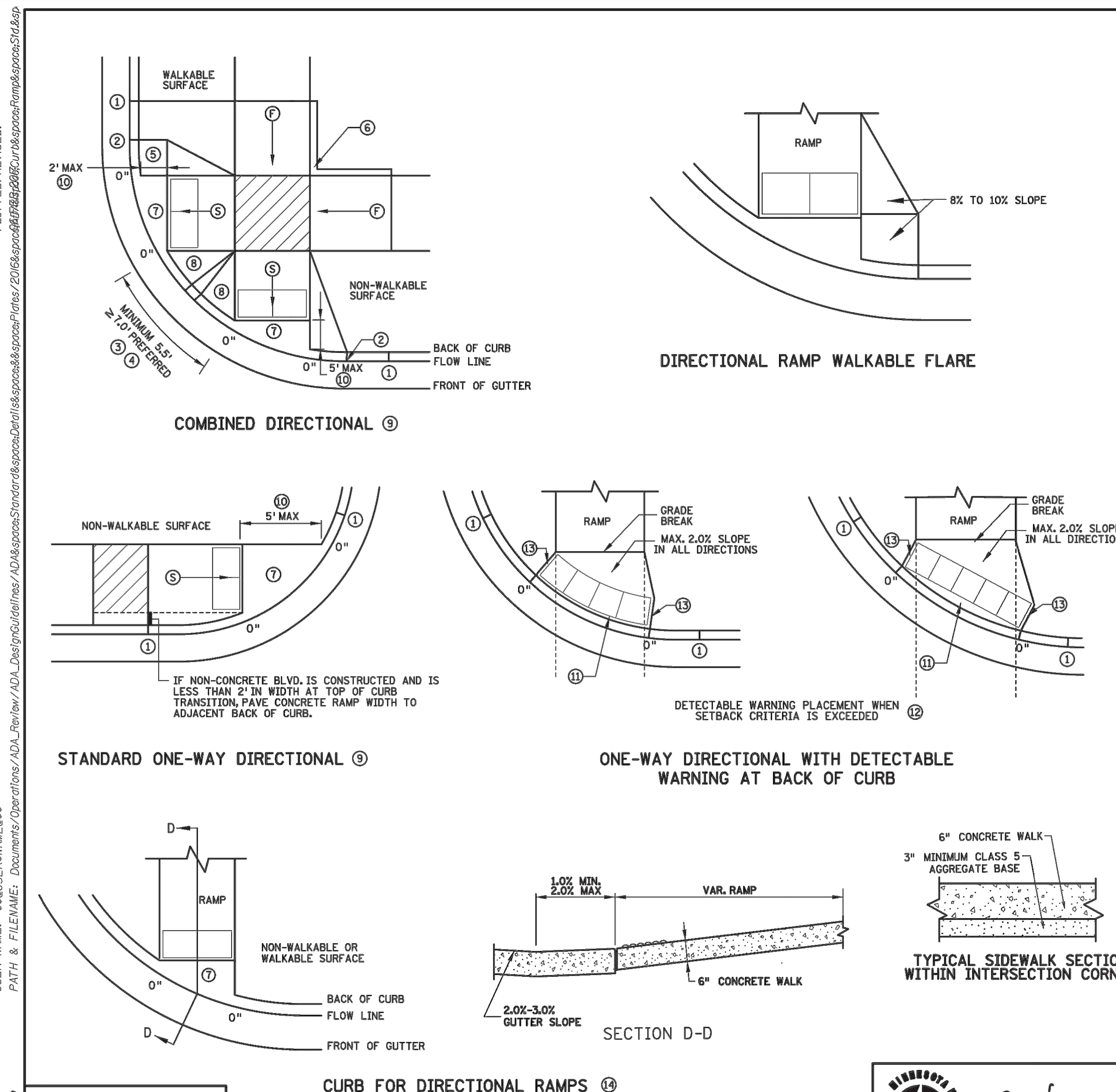

NOTES:

LANDINGS SHALL BE LOCATED ANYWHERE THE PEDESTRIAN ACCESS ROUTE (PAR) CHANGES DIRECTION, AT THE TOP OF RAMPS THAT HAVE RUNNING SLOPES GREATER THAN 5.0%, AND IF THE APPROACHING WALK IS INVERSE GRADE.

INITIAL CURB RAMP LANDINGS SHALL BE CONSTRUCTED WITHIN 15' FROM THE BACK OF CURB, WITH 6' FROM THE BACK OF CURB BEING THE PREFERRED DISTANCE, ONLY APPLICABLE WHEN THE INITIAL RAMP RUNNING SLOPE IS OVER 5.0%.

SECONDARY CURB RAMP LANDINGS ARE REQUIRED FOR EVERY 30" OF VERTICAL RISE WHEN THE LONGITUDINAL SLOPE IS GREATER THAN 5.0%.

CONTRACTION JOINTS SHALL BE CONSTRUCTED ALONG ALL GRADE BREAKS WITHIN THE PAR. 1/4" DEEP VISUAL JOINTS SHALL BE USED AT THE TOP GRADE BREAK OF CONCRETE FLARES ADJACENT TO WALKABLE SURFACES.

ALL GRADE BREAKS WITHIN THE PAR SHALL BE PERPENDICULAR TO THE PATH OF TRAVEL. THUS BOTH SIDES OF A SLOPED WALKING SURFACE MUST BE EQUAL LENGTH.

TO ENSURE INITIAL RAMPS AND INITIAL LANDINGS ARE PROPERLY CONSTRUCTED, LANDINGS SHALL BE CAST SEPARATELY. FOLLOW SIDEWALK REINFORCEMENT DETAILS ON SHEET 6 AND THE ADA SPECIAL PROVISION (PROSECUTION OF WORK).

TOP OF CURB SHALL MATCH PROPOSED ADJACENT WALK GRADE.

WHEN THE BOULEVARD IS 4' WIDE OR LESS, THE TOP OF CURB TAPER SHALL MATCH THE RAMP SLOPES TO REDUCE NEGATIVE BOULEVARD SLOPES FROM THE TOP BACK OF CURB TO THE PAR.

ALL RAMP TYPES SHOULD HAVE A MINIMUM 3' LONG RAMP LENGTH.

4' MINIMUM WIDTH OF DETECTABLE WARNING IS REQUIRED FOR ALL RAMPS. DETECTABLE WARNINGS SHALL CONTINUOUSLY EXTEND FOR A MIN. OF 24" IN THE PATH OF TRAVEL. DETECTABLE WARNING TO COVER ENTIRE WIDTH OF SHARED-USE PATH AND THE ENTIRE PAR WIDTH OF THE WALK. DETECTABLE WARNING SHOULD BE 6" LESS THAN THE PAR/PATH WIDTH. ARC LENGTH OF RADIAL DETECTABLE WARNINGS SHOULD NOT BE GREATER THAN 20 FEET.

RADIAL DETECTABLE WARNINGS SHALL BE SETBACK 3" MINIMUM TO 6" MAXIMUM FROM THE BACK OF CURB. SEE NOTES (10) & (11) FOR INFORMATION REGARDING RECTANGULAR DETECTABLE WARNING PLACEMENT.

1. MATCH FULL CURB HEIGHT.
2. 3" HIGH CURB WHEN USING A 3' LONG RAMP. 4" HIGH CURB WHEN USING A 4' LONG RAMP.
3. 3" MINIMUM CURB HEIGHT (5.5' MIN. DISTANCE REQUIRED BETWEEN DOMES) 4" PREFERRED (7' MIN. DISTANCE REQUIRED BETWEEN DOMES).
4. THE "BUMP" IN BETWEEN THE RAMPS SHOULD NOT BE IN THE PATH OF TRAVEL FOR COMBINED DIRECTIONAL RAMPS. IF THIS OCCURS MODIFY THE RAMP LOCATION OR SWITCH RAMP TO A FAN/DEPRESSED CORNER.
5. WHEN USING CONCRETE PAVED FLARES ON THE OUTSIDE OF DIRECTIONAL RAMPS, AND ADJACENT TO A WALKABLE SURFACE, DIRECTIONAL RAMP FLARES SHOULD BE USED. SEE THE DETAIL ON THIS SHEET.
6. GRADING SHALL ALWAYS BE USED WHEN FEASIBLE. V CURB, IF USED, SHALL BE PLACED OUTSIDE THE SIDEWALK LIMITS WHEN RIGHT OF WAY ALLOWS. WHEN ADJACENT TO PARKING LOTS, CONCRETE OR BITUMINOUS TAPERS SHOULD BE USED OVER V CURB TO REDUCE TRIPPING HAZARDS AND FACILITATE SNOW & ICE REMOVAL.
7. MAX. 2.0% SLOPE IN ALL DIRECTIONS IN FRONT OF GRADE BREAK AND DRAIN TO FLOW LINE. SHALL BE CONSTRUCTED INTEGRAL WITH CURB AND GUTTER.
8. 8% TO 10% WALKABLE FLARE.
9. PLACE DOMES AT THE BACK OF CURB WHEN ALLOWABLE SETBACK CRITERIA IS EXCEEDED.
10. FRONT EDGE OF DETECTABLE WARNING SHALL BE SET BACK 2' MAXIMUM WHEN ADJACENT TO WALKABLE SURFACE, AND 5' MAXIMUM WHEN ADJACENT TO NON-WALKABLE SURFACE WITH ONE CORNER SET 3" FROM BACK OF CURB. A WALKABLE SURFACE IS DEFINED AS A PAVED SURFACE ADJACENT TO A CURB RAMP WITHOUT RAISED OBSTACLES THAT COULD MISTAKENLY BE TRAVERSED BY A USER WHO IS VISUALLY IMPAIRED.
11. RECTANGULAR DETECTABLE WARNINGS MAY BE SETBACK UP TO 9" FROM THE BACK OF CURB WITH CORNERS SET 3" FROM BACK OF CURB. IF 9" SETBACK IS EXCEEDED USE RADIAL DETECTABLE WARNINGS.
12. FOR DIRECTIONAL RAMPS WITH THE DETECTABLE WARNINGS PLACED AT THE BACK OF CURB, THE DETECTABLE WARNINGS SHALL COVER THE ENTIRE WIDTH OF THE WALK/PATH. THIS ENSURES A DETECTABLE EDGE AND HELPS ELIMINATE THE CURB TAPER OBSTRUCTING THE PATH OF PEDESTRIAN TRAVEL.
13. THE CONCRETE WALK SHALL BE FORMED AND CONSTRUCTED PERPENDICULAR TO THE BACK OF CURB. MAINTAIN 3" BETWEEN EDGE OF DOMES AND EDGE OF CONCRETE.
14. TO BE USED FOR ALL DIRECTIONAL RAMPS, EXCEPT WHERE DOMES ARE PLACED ALONG THE BACK OF CURB.

LEGEND

THESE LONGITUDINAL SLOPE RANGES SHALL BE THE STARTING POINT. IF SITE CONDITIONS WARRANT, LONGITUDINAL SLOPES UP TO 8.3% OR FLATTER ARE ALLOWED.

- (S) INDICATES PEDESTRIAN RAMP - SLOPE SHALL BE BETWEEN 5.0% MINIMUM AND 8.3% MAXIMUM IN THE DIRECTION SHOWN AND THE CROSS SLOPE SHALL NOT EXCEED 2.0%.
- (F) INDICATES PEDESTRIAN RAMP - SLOPE SHALL BE GREATER THAN 2.0% AND LESS THAN 5.0% IN THE DIRECTION SHOWN AND CROSS SLOPE SHALL NOT EXCEED 2.0%.
- LANDING AREA - 4' X 4' MIN. (5' X 5' MIN. PREFERRED) DIMENSIONS AND MAX 2.0% SLOPE IN ALL DIRECTIONS. LANDING SHALL BE FULL WIDTH OF INCOMING PARS.
- X" CURB HEIGHT

DISTRICT #: DISTRICT #
USER NAME: $$@USERNAME@$$
PATH & FILENAME: Documents/Operations/ADA_Review/ADA_DesignGuidelines/ADA&space;Standard&space;Details&space;Plates/2016&space;ADA&space;Curb&space;Ramp&space;Std&sp
PLOTTED/REVISED:
FILE NAME: @FILENAME@

REVISION:
APPROVED: JANUARY 23, 2017
OPERATIONS ENGINEER

STATE DESIGN ENGINEER
REVISED:
APPROVED: 1-23-2017

PEDESTRIAN CURB RAMP DETAILS
STANDARD PLAN 5-297.250 | 2 OF 6

Oct 18, 2018 - 5:24pm - User:jweyenberg L:\PROJECTS\20787\CAD\Civil\Sheets\20787-C901-DETL.dwg

Sambatek
www.sambatek.com
12800 Whitewater Drive, Suite 300
Minnetonka, MN 55343
763.476.6010 telephone
763.476.8532 facsimile
Engineering | Surveying | Planning | Environmental

Client
SHAKOPEE CROSSINGS LIMITED PARTNERSHIP
8170 CARRIAGE COURT NORTH
SUITE 210
SHAKOPEE, MN 55379

Project
SOUTHBRIDGE CROSSINGS EAST 5TH ADDITION

Location
SHAKOPEE, MN

Certification
I hereby certify that this plan, specification or report was prepared by me or under my direct supervision and that I am a duly licensed professional ENGINEER under the laws of the state of Minnesota.

George D. Abernathy
Registration No. 43505 Date: 10/19/2018

If applicable, contact us for a wet signed copy of this plan which is available upon request at Sambatek's, Minnetonka, MN office.

Summary
Designed: GDA Drawn: JMW
Approved: BDB Book / Page:
Phase: PERMIT Initial Issued: 10/19/2018

Revision History
No.	Date	By	Submittal / Revision
A	10/19/18	JMW	Building Revisions

Sheet Title
DETAILS

Sheet No. Revision
C9.02 A

Project No. 20787

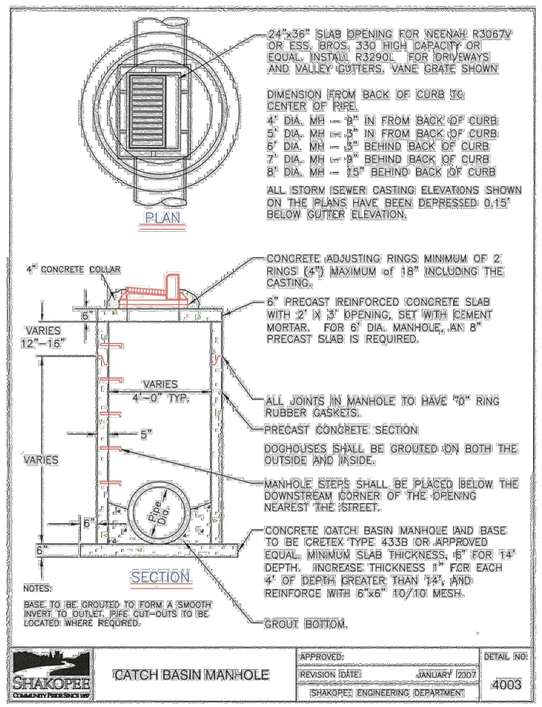

SHAKOPEE	CATCH BASIN MANHOLE	APPROVED: / REVISION DATE: JANUARY 2007 / SHAKOPEE ENGINEERING DEPARTMENT	DETAIL NO: 4003

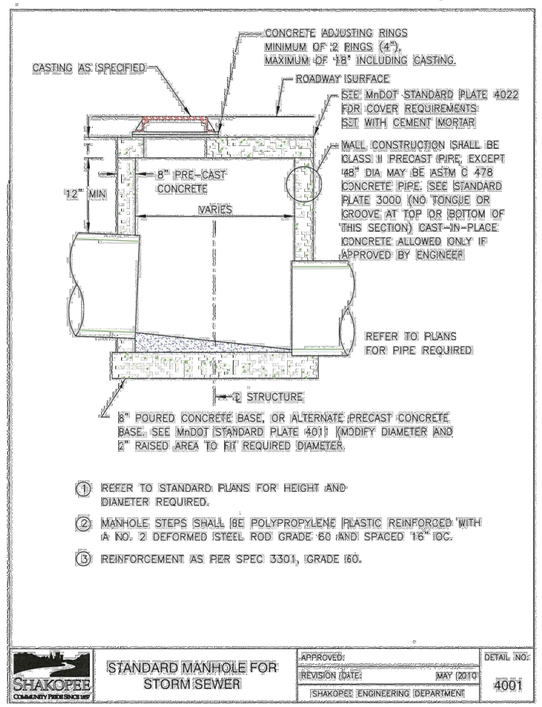

SHAKOPEE	STANDARD MANHOLE FOR STORM SEWER	APPROVED: / REVISION DATE: MAY 2010 / SHAKOPEE ENGINEERING DEPARTMENT	DETAIL NO: 4001

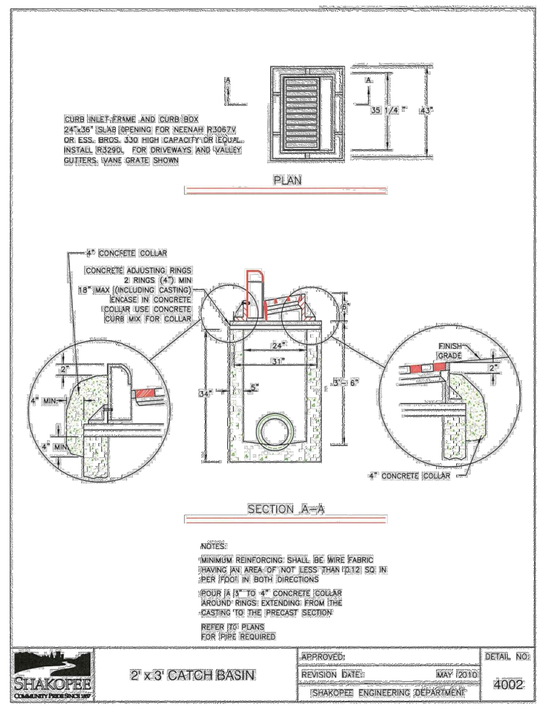

SHAKOPEE	2' x 3' CATCH BASIN	APPROVED: / REVISION DATE: MAY 2010 / SHAKOPEE ENGINEERING DEPARTMENT	DETAIL NO: 4002

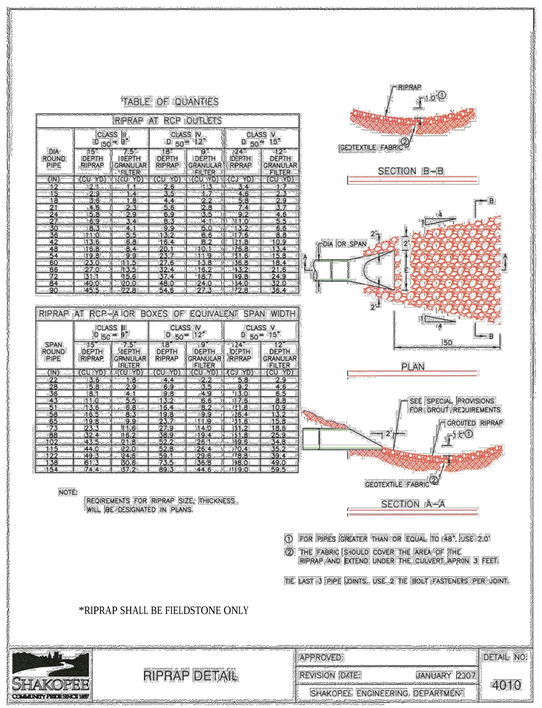

SHAKOPEE	RIPRAP DETAIL	APPROVED: / REVISION DATE: JANUARY 2007 / SHAKOPEE ENGINEERING DEPARTMENT	DETAIL NO: 4010

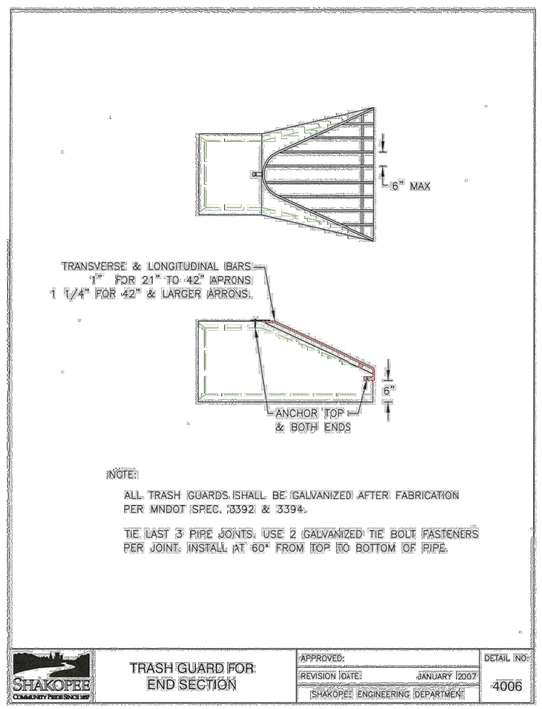

SHAKOPEE	TRASH GUARD FOR END SECTION	APPROVED: / REVISION DATE: JANUARY 2007 / SHAKOPEE ENGINEERING DEPARTMENT	DETAIL NO: 4006

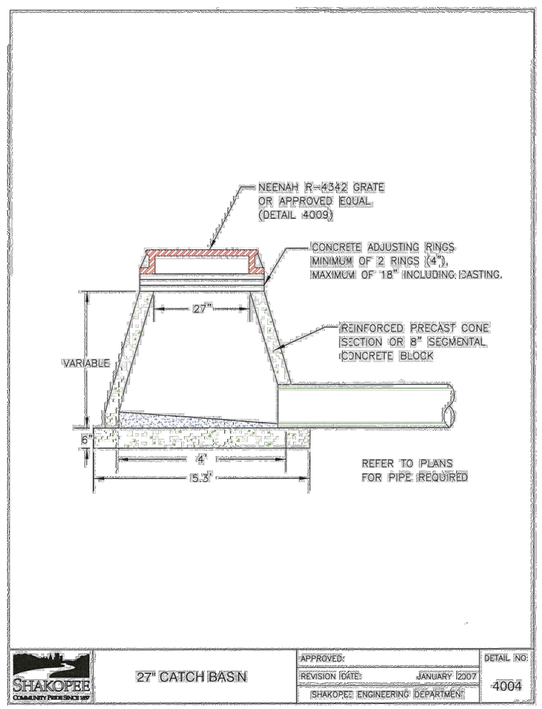

SHAKOPEE	27" CATCH BASIN	APPROVED: / REVISION DATE: JANUARY 2007 / SHAKOPEE ENGINEERING DEPARTMENT	DETAIL NO: 4004

Sambatek
www.sambatek.com
12800 Whitewater Drive, Suite 300
Minnetonka, MN 55343
763.476.6010 telephone
763.476.8532 facsimile
Engineering | Surveying | Planning | Environmental

Client

SHAKOPEE CROSSINGS LIMITED PARTNERSHIP

8170 CARRIAGE COURT NORTH
SUITE 210
SHAKOPEE, MN 55379

Project

SOUTHBRIDGE CROSSINGS EAST 5TH ADDITION

Location

SHAKOPEE, MN

Certification

I hereby certify that this plan, specification or report was prepared by me or under my direct supervision and that I am a duly licensed professional ENGINEER under the laws of the state of Minnesota.

George D. Abernathy
Registration No. 43505 Date: 10/19/2018

If applicable, contact us for a wet signed copy of this plan which is available upon request at Sambatek's, Minnetonka, MN office.

Summary

Designed: GDA Drawn: JMW
Approved: BDB Book / Page:
Phase: PERMIT Initial Issued: 10/19/2018

Revision History

No.	Date	By	Submittal / Revision
A	10/19/18	JMW	Building Revisions

Sheet Title
DETAILS

Sheet No. Revision
C9.03 A

Project No. 20787

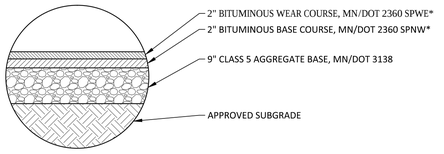

HEAVY DUTY PAVEMENT

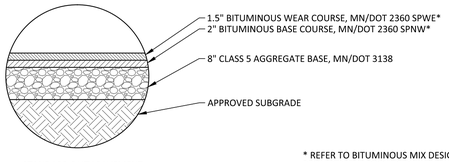

STANDARD DUTY PAVEMENT

* REFER TO BITUMINOUS MIX DESIGN REQUIREMENT PROVIDED BY THE GEOTECHNICAL CONSULTANT

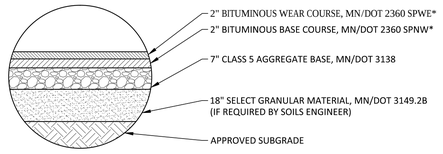

HEAVY DUTY PAVEMENT
WITH SAND SUBBASE

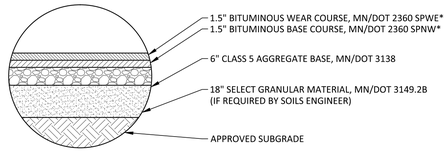

STANDARD DUTY PAVEMENT
WITH SAND SUBBASE

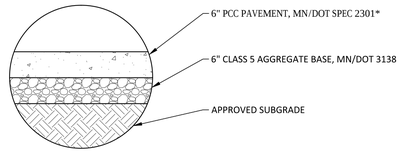

HEAVY DUTY CONCRETE

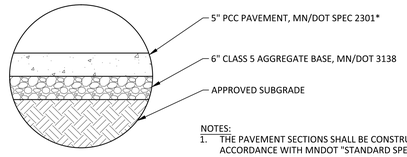

STANDARD DUTY CONCRETE

NOTES:
1. THE PAVEMENT SECTIONS SHALL BE CONSTRUCTED IN ACCORDANCE WITH MNDOT "STANDARD SPECIFICATION FOR CONSTRUCTION", AND ALSO THE REQUIREMENTS OF THE OWNER'S GEOTECHNICAL CONSULTANT.
2. ALL THICKNESSES, AS SPECIFIED, ARE TO BE CONSIDERED MINIMUM DEPTHS, AFTER COMPACTION.
3. MN/DOT SPEC. 2357 BITUMINOUS TACK COAT SHALL BE PLACED BETWEEN SUCCESSIVE BITUMINOUS LIFTS AND AGAINST ABUTTING CONCRETE CURB EDGES.

01 PAVEMENT SECTIONS
N.T.S.

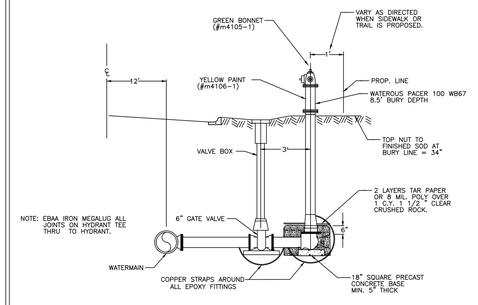

STANDARD HYDRANT INSTALLATION
NO SCALE

Shakopee Public Utilities

Shakopee Public Utilities Commission Details For Watermain Construction

WAT - 008

ADOPTED	REV.		DESIGN	
SPUC	DATE	APP'D	DRAWN	RRM
RES. # 1075			APP'D	JDA
08-04-14				

NOTES:
1. VALVE BOX SHALL BE CENTERED ON OPERATING NUTS. STRAIGHT, FREE FROM DEBRIS, AND ALL SECTIONS UNBROKEN.
2. VALVES IN EASEMENTS SHALL HAVE CHANNEL POST, WITNESS MARKERS WITH REFLECTIVE "G.V." SIGN.
3. DEEP VALVES SHALL HAVE NUT EXTENSIONS INSTALLED TO ELEVATION TO ACCOMMODATE STANDARD 10' KEY. BOTTOM NUT SHALL BE BOLTED TO VALVE NUT AND ONLY ONE SECTION.
4. COMPACTION WITH MECHANICAL TAMPER AROUND VALVE BOX SHALL BE PLACED AND COMPACTED WITH 2' LIFTS TO ACHIEVE 95% COMPACTION.

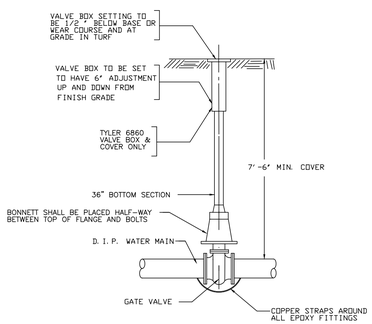

TYPICAL VALVE BOX INSTALLATION
NO SCALE

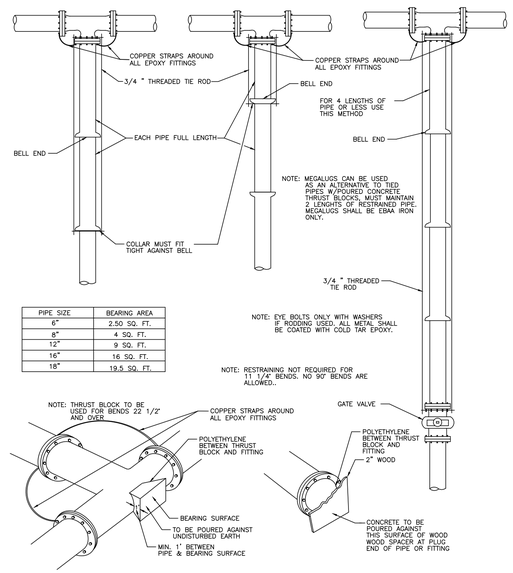

PIPE SIZE	BEARING AREA
6"	2.50 SQ. FT.
8"	4 SQ. FT.
12"	9 SQ. FT.
16"	16 SQ. FT.
18"	19.5 SQ. FT.

THRUST RESTRAINTS FOR BENDS, TEES, AND PLUGS
NO SCALE

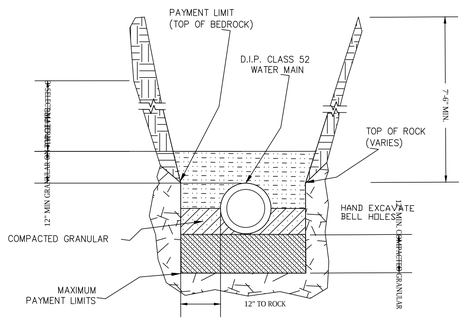

NOTE: PAY LIMITS EXTEND ONE FOOT (1') ON EACH SIDE OF THE PIPE REGARDLESS OF DEPTH.

WATERMAIN LAYING CONDITION TYPE 3

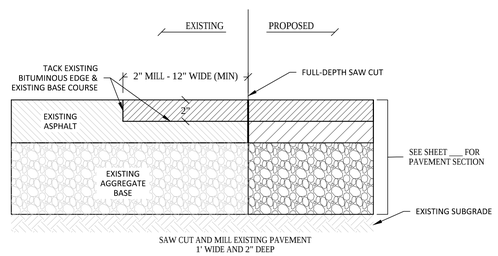

SAW CUT AND MILL EXISTING PAVEMENT 1' WIDE AND 2" DEEP

02 PAVEMENT JOINT
N.T.S.

Shakopee Public Utilities

Shakopee Public Utilities Commission Details For Watermain Construction

WAT - 002

ADOPTED	REV.		DESIGN	
SPUC	DATE	APP'D	DRAWN	RRM
RES. # 1075			APP'D	JDA
08-04-14				

Shakopee Public Utilities

Shakopee Public Utilities Commission Details For Watermain Construction

WAT - 007

ADOPTED	REV.		DESIGN	
SPUC	DATE	APP'D	DRAWN	RRM
RES. # 1075			APP'D	JDA
08-04-14				

Shakopee Public Utilities

Shakopee Public Utilities Commission Details For Watermain Construction

WAT - 018

ADOPTED	REV.		DESIGN	
SPUC	DATE	APP'D	DRAWN	CJF
RES. # 1075			APP'D	JDA
08-04-14				

Oct 18, 2018 - 5:25pm - User:jweyenberg L:\PROJECTS\20787\CAD\Civil\Sheets\20787-C901-DETL.dwg

Sambatek
www.sambatek.com
12800 Whitewater Drive, Suite 300
Minnetonka, MN 55343
763.476.6010 telephone
763.476.8532 facsimile
Engineering | Surveying | Planning | Environmental

Client
SHAKOPEE CROSSINGS LIMITED PARTNERSHIP
8170 CARRIAGE COURT NORTH
SUITE 210
SHAKOPEE, MN 55379

Project
SOUTHBRIDGE CROSSINGS EAST 5TH ADDITION

Location
SHAKOPEE, MN

Certification
I hereby certify that this plan, specification or report was prepared by me or under my direct supervision and that I am a duly licensed professional ENGINEER under the laws of the state of Minnesota.

George D. Abernathy
Registration No. 43505 Date: 10/19/2018
If applicable, contact us for a wet signed copy of this plan which is available upon request at Sambatek's, Minnetonka, MN office.

Summary
Designed: GDA Drawn: JMW
Approved: BDB Book / Page:
Phase: PERMIT Initial Issued: 10/19/2018

Revision History

No.	Date	By	Submittal / Revision
A	10/19/18	JMW	Building Revisions

Sheet Title
DETAILS

Sheet No. Revision
C9.04 A

Project No. 20787

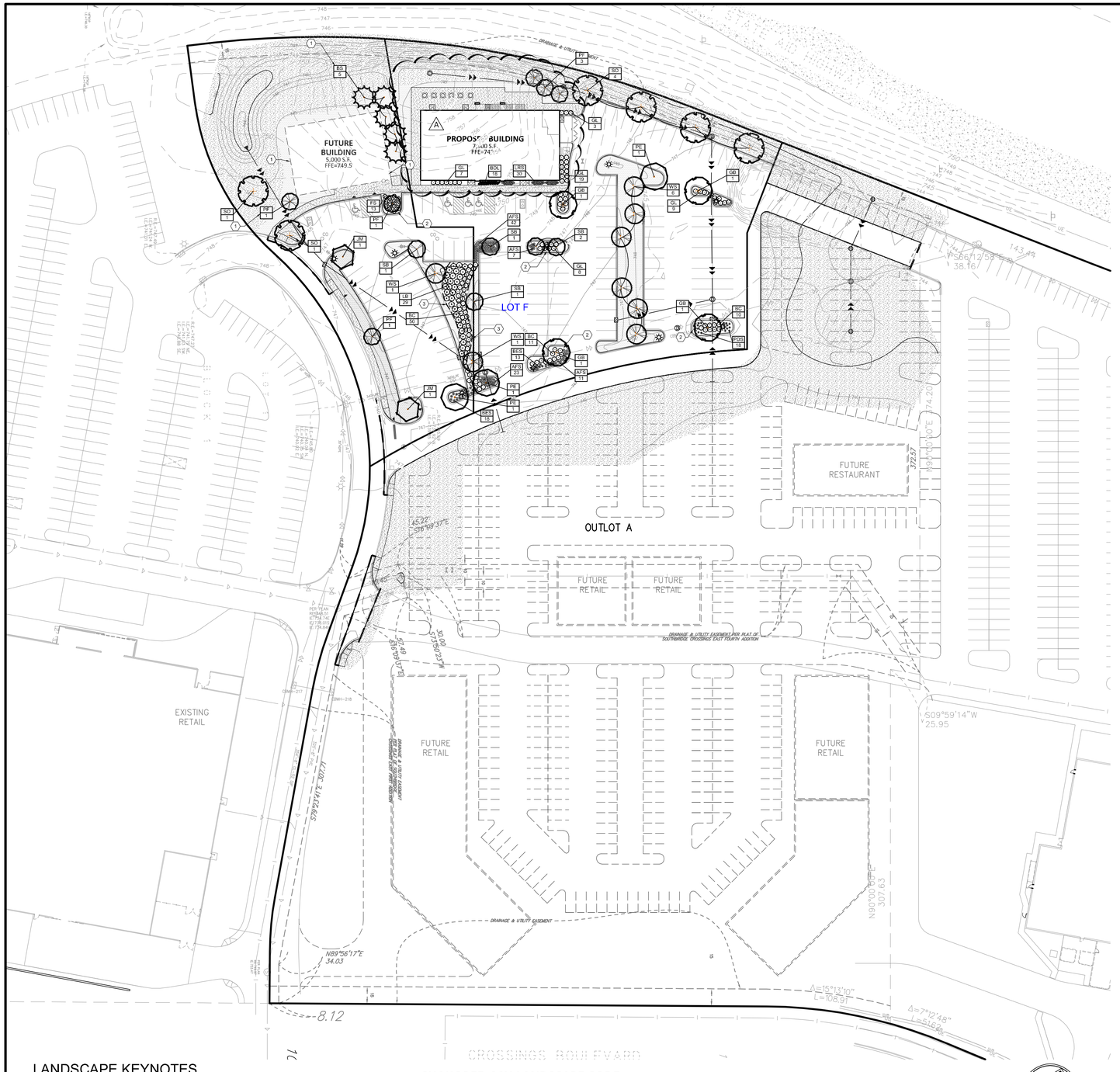

LANDSCAPE KEYNOTES

SYMBOL	DESCRIPTION	DETAIL
1	MAINTENANCE STRIP	
2	ROCK MULCH- 3/4" DRESSER TRAP ROCK W/ FABRIC	
3	ALUMINUM LANDSCAPE EDGING- 4" COLOR: BLACK	

SHAKOPEE, MN LANDSCAPE CODE

LOT F (WILLY MCCOYS)

GROSS FLOOR AREA
PLANT UNIT FORMULA
6,500SF @ 3 PER 1000 SF — 20 UNITS
TOTAL — **20 UNITS**

PLANT/UNIT BREAKDOWN	REQUIRED	PROVIDED
50% SHRUBS MAX.	10 SHRUBS	73
25% ORNAMENTAL TREE MAX.	5 ORN. TREES	7
25% SHADE AND EVERGREEN TREES	5 TREES	16

*ALSO INCLUDES ADDITIONAL PERENNIALS AND GRASSES

IMPERVIOUS AREA PLANTINGS
47,371 SF PAVED SURFACE/4,000 SF PER TREE = (12) TREES (12 PROVIDED)

LOT G (UNNAMED BUILDING)

GROSS FLOOR AREA
PLANT UNIT FORMULA
5,000 SF @ 3 PER 1000 SF — 15 UNITS
TOTAL — **15 UNITS**

PLANT/UNIT BREAKDOWN	REQUIRED	PROVIDED
50% SHRUBS MAX.	8 SHRUBS	86
25% ORNAMENTAL TREE MAX.	4 ORN. TREES	4
25% SHADE AND EVERGREEN TREES	4 TREES	7

*ALSO INCLUDES ADDITIONAL PERENNIALS AND GRASSES

IMPERVIOUS AREA PLANTINGS
9,036 PAVED SURFACE/4,000 SF PER TREE = (3) TREES (3 PROVIDED)

NORTH
0 48 96
SCALE IN FEET

PLANT SCHEDULE LOT F

TREES	CODE	BOTANICAL NAME / COMMON NAME	CONT	CAL	QTY
	WS	Betula papyrifera `Whitespire` / Whitespire Birch	B & B	2.5"Cal	6
	GB	Ginkgo biloba `Autumn Gold` TM / Maidenhair Tree	B & B	2.5"Cal	4
	SO	Quercus bicolor / Swamp White Oak	B & B	2.5"Cal	4
	PE	Ulmus americana `Princeton` / American Elm	B & B	2.5"Cal	2
ORN. TREES	CODE	BOTANICAL NAME / COMMON NAME	CONT	CAL	QTY
	SB	Amelanchier canadensis `Autumn Brilliance` / Autumn Brilliance Serviceberry	B & B	2"Cal	4
	PF	Malus x `Prairiflre` / Prairiflre Crab Apple	B & B	2"Cal	3
SHRUBS	CODE	BOTANICAL NAME / COMMON NAME	CONT	H` X W`	QTY
	BC	Aronia melanocarpa `Autumn Magic` / Autumn Magic Black Chokeberry	5 gal		27
	GL	Rhus aromatica `Gro-Low` / Gro-Low Fragrant Sumac	5 gal		46
GRASSES	CODE	BOTANICAL NAME / COMMON NAME	CONT	H` X W`	QTY
	PDS	Sporobolus heterolepis / Prairie Dropseed	1 gal		18
PERENNIALS	CODE	BOTANICAL NAME / COMMON NAME	CONT	H` X W`	QTY
	BDL	Hemerocallis x `Baja` / Baja Daylily	1 gal		18
	LRS	Perovskia atriplicifolia `Little Spire` TM / Little Spire Russian Sage	1 gal		30
	BES	Rudbeckia fulgida `Goldstrum` / Black Eyed Susan	1 gal		14
	AFS	Sedum x `Autumn Fire` / Autumn Fire Sedum	1 gal		83
GROUND COVERS	CODE	BOTANICAL NAME / COMMON NAME	QTY		
	TUR HIG	Turf Sod Highland Sod / Sod	5,015 sf		

PLANT SCHEDULE LOT G

TREES	CODE	BOTANICAL NAME / COMMON NAME	CONT	CAL	SIZE	QTY
	JM	Acer rubrum `Bailcraig` / Scarlet Jewell Maple	B & B	2.5"Cal		2
	WS	Betula papyrifera `Whitespire` / Whitespire Birch	B & B	2.5"Cal		2
	SO	Quercus bicolor / Swamp White Oak	B & B	2.5"Cal		2
	PE	Ulmus americana `Princeton` / American Elm	B & B	2.5"Cal		1
CONIFERS	CODE	BOTANICAL NAME / COMMON NAME	CONT	CAL	SIZE	QTY
	BS	Picea glauca densata / Black Hills Spruce	B & B		6`	5
ORN. TREES	CODE	BOTANICAL NAME / COMMON NAME	CONT	CAL	SIZE	QTY
	SB	Amelanchier canadensis `Autumn Brilliance` / Autumn Brilliance Serviceberry	B & B	2"Cal		1
	PF	Malus x `Prairiflre` / Prairiflre Crab Apple	B & B	2"Cal		3
SHRUBS	CODE	BOTANICAL NAME / COMMON NAME	CONT	H` X W`		QTY
	BC	Aronia melanocarpa `Autumn Magic` / Autumn Magic Black Chokeberry	5 gal			44
	FS	Sorbaria sorbifolia `Sem` / Sem Ash Leaf Spirea	5 gal			13
	LB	Syringa x `Bloomerang` / Lilac	5 gal			29
PERENNIALS	CODE	BOTANICAL NAME / COMMON NAME	CONT	H` X W`		QTY
	BES	Rudbeckia fulgida `Goldstrum` / Black Eyed Susan	1 gal			17
GROUND COVERS	CODE	BOTANICAL NAME / COMMON NAME	QTY			
	TUR HIG	Turf Sod Highland Sod / Sod	8,470 sf			

Sambatek
www.sambatek.com
12800 Whitewater Drive, Suite 300
Minnetonka, MN 55343
763.476.6010 telephone
763.476.8532 facsimile
Engineering | Surveying | Planning | Environmental

Client

SHAKOPEE CROSSINGS LIMITED PARTNERSHIP

8170 CARRIAGE COURT NORTH
SUITE 210
SHAKOPEE, MN 55379

Project

SOUTHBRIDGE CROSSINGS EAST 5TH ADDITION

Location

SHAKOPEE, MN

Certification

I hereby certify that this survey, plan or report was prepared by me or under my direct supervision and that I am a duly Licensed LANDSCAPE ARCHITECT under the laws of the State of Minnesota.

Joshua J McKinney
Registration No. 53234 Date: 10/19/2018

This certification is not valid unless wet signed in blue ink. If applicable, contact us for a wet signed copy of this survey which is available upon request at Sambatek, Minnetonka, MN office.

Summary

Designed: GDA Drawn: JMW
Approved: BDB Book / Page:
Phase: PERMIT Initial Issued: 10/19/2018

Revision History

No.	Date	By	Submittal / Revision
A	10/19/18	JMW	Building Revisions

Sheet Title

LANDSCAPE PLAN

Sheet No. Revision

L1.01 A

Project No. 20787

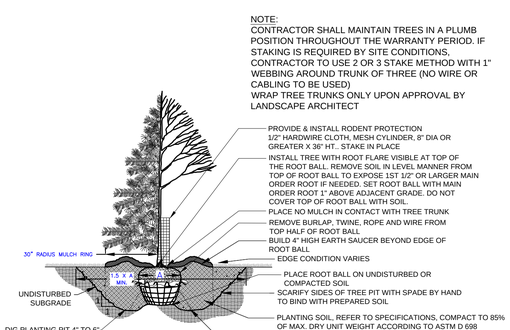

1 L2.01 TREE PLANTING DETAIL

NTS

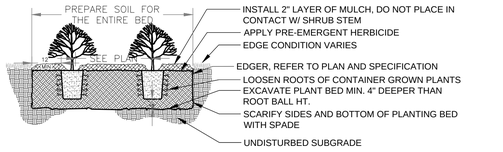

2 L2.01 SHRUB PLANTING DETAIL

NTS

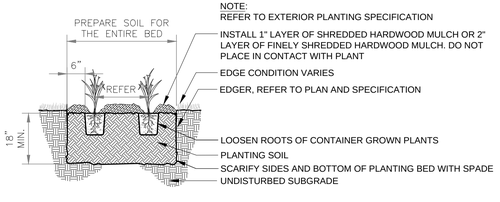

3 L2.01 PERENNIAL PLANTING DETAIL

NTS

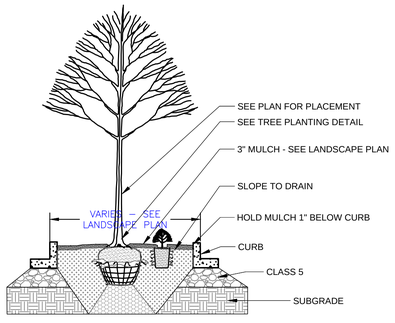

4 L2.01 PARKING LOT ISLAND DETAIL

NTS

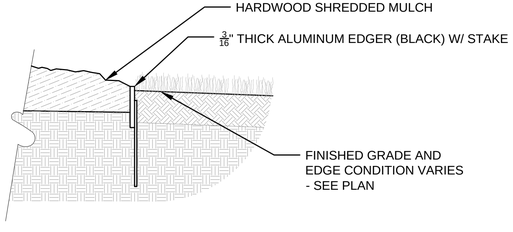

5 L2.01 ALUMINUM EDGER

NTS

NOTES

GENERAL NOTES:

1. THE CONTRACTOR SHALL INSPECT THE SITE AND BECOME FAMILIAR WITH THE EXISTING CONDITIONS RELATING TO THE NATURE AND SCOPE OF THE WORK.
2. THE CONTRACTOR SHALL VERIFY PLAN LAYOUT AND BRING TO THE ATTENTION OF THE LANDSCAPE ARCHITECT DISCREPANCIES WHICH MAY COMPROMISE THE DESIGN OR INTENT OF THE LAYOUT.
3. THE CONTRACTOR SHALL BE RESPONSIBLE FOR COMPLYING WITH ALL APPLICABLE CODES, REGULATIONS, AND PERMITS GOVERNING THE WORK.
4. THE CONTRACTOR SHALL PROTECT EXISTING ROADS, CURBS/GUTTERS, TRAILS, TREES, LAWNS AND SITE ELEMENTS DURING CONSTRUCTION. DAMAGE TO SAME SHALL BE REPAIRED AND/OR REPLACED AT NO ADDITIONAL COST TO THE OWNER.
5. LOCATE AND VERIFY ALL UTILITIES, INCLUDING IRRIGATION LINES, WITH THE OWNER FOR PROPRIETARY UTILITIES AND GOPHER STATE ONE CALL 48 HOURS BEFORE DIGGING. CONTRACTOR SHALL BE RESPONSIBLE FOR THE PROTECTION AND REPAIR OF ANY DAMAGES TO SAME. NOTIFY THE LANDSCAPE ARCHITECT OF ANY CONFLICTS TO FACILITATE PLANT RELOCATION.
6. THE LANDSCAPE CONTRACTOR SHALL COORDINATE THE PHASES OF CONSTRUCTION AND PLANTING INSTALLATION WITH OTHER CONTRACTORS WORKING ON SITE.
7. THE CONTRACTOR SHALL REVIEW THE SITE FOR DEFICIENCIES IN SITE CONDITIONS WHICH MIGHT NEGATIVELY AFFECT PLANT ESTABLISHMENT, SURVIVAL OR WARRANTY. UNDESIRABLE SITE CONDITIONS SHALL BE BROUGHT TO THE ATTENTION OF THE LANDSCAPE ARCHITECT PRIOR TO BEGINNING OF WORK.
8. THE PLAN TAKES PRECEDENCE OVER THE LANDSCAPE LEGEND IF DISCREPANCIES EXIST. QUANTITIES SHOWN IN THE PLANTING SCHEDULE ARE FOR THE CONTRACTOR'S CONVENIENCE. CONTRACTOR TO VERIFY QUANTITIES SHOWN ON THE PLAN.
9. THE SPECIFICATIONS TAKE PRECEDENCE OVER THE PLANTING NOTES AND GENERAL NOTES.
10. EXISTING TREES AND SHRUBS TO REMAIN SHALL BE PROTECTED TO THE DRIP LINE FROM ALL CONSTRUCTION TRAFFIC, STORAGE OF MATERIALS ETC. WITH 4' HT. ORANGE PLASTIC SAFETY FENCING ADEQUATELY SUPPORTED BY STEEL FENCE POSTS 6' O.C. MAXIMUM SPACING.
11. LONG-TERM STORAGE OF MATERIALS OR SUPPLIES ON-SITE WILL NOT BE ALLOWED.
12. CONTRACTOR SHALL REQUEST IN WRITING, A FINAL ACCEPTANCE INSPECTION.

PLANTING NOTES:

1. NO PLANTS SHALL BE INSTALLED UNTIL FINAL GRADING AND CONSTRUCTION HAS BEEN COMPLETED IN THE IMMEDIATE AREA.
2. A GRANULAR PRE-EMERGENT HERBICIDE SHALL BE APPLIED TO ALL PLANT BEDS AT THE MANUFACTURERS RECOMMENDED RATE PRIOR TO PLANT INSTALLATION.
3. ALL PLANTING STOCK SHALL CONFORM TO THE "AMERICAN STANDARD FOR NURSERY STOCK," ANSI-Z60, LATEST EDITION, OF THE AMERICAN ASSOCIATION OF NURSERYMEN, INC. AND SHALL CONSTITUTE MINIMUM QUALITY REQUIREMENTS FOR PLANT MATERIALS.
4. OVERSTORY TREES SHALL BEGIN BRANCHING NO LOWER THAN 6' ABOVE PAVED SURFACES.
5. ALL PLANTS MUST BE HEALTHY, VIGOROUS MATERIAL, FREE OF PESTS AND DISEASE AND BE CONTAINER GROWN OR BALLED AND BURLAPPED AS INDICATED IN THE LANDSCAPE LEGEND.
6. PLANT MATERIALS TO BE INSTALLED PER PLANTING DETAILS.
7. ALL TREES MUST BE STRAIGHT TRUNKED AND FULL HEADED AND MEET ALL REQUIREMENTS SPECIFIED.
8. THE LANDSCAPE ARCHITECT RESERVES THE RIGHT TO REJECT ANY PLANTS WHICH ARE DEEMED UNSATISFACTORY BEFORE, DURING, OR AFTER INSTALLATION.
9. NO SUBSTITUTIONS OF PLANT MATERIAL SHALL BE ACCEPTED UNLESS APPROVED IN WRITING BY THE LANDSCAPE ARCHITECT.
10. ALL PLANT MATERIAL QUANTITIES, SHAPES OF BEDS AND LOCATIONS SHOWN ARE APPROXIMATE. CONTRACTOR SHALL BE RESPONSIBLE FOR COMPLETE COVERAGE OF ALL PLANTING BEDS AT SPACING SHOWN AND ADJUSTED TO CONFORM TO THE EXACT CONDITIONS OF THE SITE. THE LANDSCAPE ARCHITECT SHALL APPROVE THE STAKING LOCATION OF ALL PLANT MATERIALS PRIOR TO INSTALLATION.
11. ALL PLANTING AREAS MUST BE COMPLETELY MULCHED AS SPECIFIED.
12. MULCH: SHREDDED HARDWOOD MULCH, CLEAN AND FREE OF NOXIOUS WEEDS OR OTHER DELETERIOUS MATERIAL. IN ALL MASS PLANTING BEDS AND FOR TREES, UNLESS INDICATED AS ROCK MULCH ON DRAWINGS. SUBMIT SAMPLE TO LANDSCAPE ARCHITECT PRIOR TO DELIVERY ON-SITE FOR APPROVAL. DELIVER MULCH ON DAY OF INSTALLATION. USE 4" FOR SHRUB BEDS, AND 3" FOR PERENNIAL/GROUND COVER BEDS, UNLESS OTHERWISE DIRECTED.
13. THE CONTRACTOR SHALL BE RESPONSIBLE FOR ALL MULCHES AND PLANTING SOIL QUANTITIES TO COMPLETE THE WORK SHOWN ON THE PLAN.
14. USE ANTI-DESICCANT (WILTPRUF OR APPROVED EQUAL) ON DECIDUOUS PLANTS MOVED IN LEAF AND FOR EVERGREENS MOVED ANYTIME. APPLY AS PER MANUFACTURER'S INSTRUCTION. ALL EVERGREENS SHALL BE SPRAYED IN THE LATE FALL FOR WINTER PROTECTION DURING WARRANTY PERIOD.
14. PLANTING SOIL FOR TREES, SHRUBS AND GROUND COVERS: FERTILE FRIABLE LOAM CONTAINING A LIBERAL AMOUNT (4% MIN.) OF HUMUS AND CAPABLE OF SUSTAINING VIGOROUS PLANT GROWTH. IT SHALL COMPLY WITH MNDOT SPECIFICATION 3877 TYPE B SELECT TOPSOIL. MIXTURE SHALL BE FREE FROM HARDPACK SUBSOIL, STONES, CHEMICALS, NOXIOUS WEEDS, ETC. SOIL MIXTURE SHALL HAVE A PH BETWEEN 6.1 AND 7.5 AND 10-0-10 FERTILIZER AT THE RATE OF 3 POUNDS PER CUBIC YARD. IN PLANTING BEDS INCORPORATE THIS MIXTURE THROUGHOUT THE ENTIRE BED IN A 6" LAYER AND ROTO-TILLING IT INTO THE TOP 12" OF SOIL AT A 1:1 RATIO.ANY PLANT STOCK NOT PLANTED ON DAY OF DELIVERY SHALL BE HEELED IN AND WATERED UNTIL INSTALLATION. PLANTS NOT MAINTAINED IN THIS MANNER WILL BE REJECTED.
15. ALL PLANTS SHALL BE GUARANTEED FOR TWO COMPLETE GROWING SEASONS (APRIL 1 - NOVEMBER 1), UNLESS OTHERWISE SPECIFIED. THE GUARANTEE SHALL COVER THE FULL COST OF REPLACEMENT INCLUDING LABOR AND PLANTS.
16. CONTRACTOR SHALL NOTIFY THE LANDSCAPE ARCHITECT AT LEAST 3 DAYS PRIOR TO PLANNED DELIVERY. THE CONTRACTOR SHALL NOTIFY THE LANDSCAPE ARCHITECT AT LEAST 24 HOURS IN ADVANCE OF BEGINNING PLANT INSTALLATION.
17. SEASONS/TIME OF PLANTING AND SEEDING: NOTE: THE CONTRACTOR MAY ELECT TO PLANT IN OFF-SEASONS ENTIRELY AT HIS/HER RISK. DECIDUOUS

17.1.	POTTED PLANTS:	4/1 - 6/1; 9/21 - 11/1
17.2.	DECIDUOUS /B&B:	4/1 - 6/1; 9/21 - 11/1
17.3.	EVERGREEN POTTED PLANTS:	4/1 - 6/1; 9/21-11/1
17.4.	EVERGREEN B&B:	4/1 - 5/1; 9/21 - 11/1
17.5.	TURF/LAWN SEEDING:	4/1 - 6/1; 7/20 - 9/20
17.6.	NATIVE MIX SEEDING:	4/1 - 7/20; 9/20-10/20

18. MAINTENANCE SHALL BEGIN IMMEDIATELY AFTER EACH PORTION OF THE WORK IS IN PLACE. PLANT MATERIAL SHALL BE PROTECTED AND MAINTAINED UNTIL THE INSTALLATION OF THE PLANTS IS COMPLETE, INSPECTION HAS BEEN MADE, AND PLANTINGS ARE ACCEPTED EXCLUSIVE OF THE GUARANTEE. MAINTENANCE SHALL INCLUDE WATERING, CULTIVATING, MULCHING, REMOVAL OF DEAD MATERIALS, RE-SETTING PLANTS TO PROPER GRADE AND KEEPING PLANTS IN A PLUMB POSITION. AFTER ACCEPTANCE, THE OWNER SHALL ASSUME MAINTENANCE RESPONSIBILITIES. HOWEVER, THE CONTRACTOR SHALL CONTINUE TO BE RESPONSIBLE FOR KEEPING THE TREES PLUMB THROUGHOUT THE GUARANTEE PERIOD.
19. ANY PLANT MATERIAL WHICH DIES, TURNS BROWN, OR DEFOLIATES (PRIOR TO TOTAL ACCEPTANCE OF THE WORK) SHALL BE PROMPTLY REMOVED FROM THE SITE AND REPLACED WITH MATERIAL OF THE SAME SPECIES, QUANTITY, AND SIZE AND MEETING ALL LANDSCAPE LEGEND SPECIFICATIONS.
20. WATERING: MAINTAIN A WATERING SCHEDULE WHICH WILL THOROUGHLY WATER ALL PLANTS ONCE A WEEK. IN EXTREMELY HOT, DRY WEATHER, WATER MORE OFTEN AS REQUIRED BY INDICATIONS OF HEAT STRESS SUCH AS WILTING LEAVES. CHECK MOISTURE UNDER MULCH PRIOR TO WATERING TO DETERMINE NEED. CONTRACTOR SHALL MAKE THE NECESSARY ARRANGEMENTS FOR WATER.

TURF NOTES:

TURF ESTABLISHMENT SHALL BE ACCOMPLISHED IN ACCORDANCE WITH THE PROVISIONS OF THE MN/DOT 2105 AND 2575 EXCEPT AS MODIFIED BELOW:

1. ALL AREAS TO RECEIVE SOD SHALL ALSO RECEIVE 4" OF TOPSOIL PRIOR TO INSTALLING SOD. TOPSOIL SHALL BE FREE OF TREE ROOTS, STUMPS, BUILDING MATERIAL, AND TRASH, AND SHALL BE FREE OF STONES LARGER THAN 1 ½" INCHES IN ANY DIMENSION.
2. WHERE SOD ABUTS PAVED SURFACES, FINISHED GRADE OF SOD/SEED SHALL BE HELD 1" BELOW SURFACE ELEVATION OF TRAIL, SLAB, CURB, ETC.
3. SOD SHALL BE LAID PARALLEL TO THE CONTOURS AND SHALL HAVE STAGGERED JOINTS. ON SLOPES STEEPER THAN 3:1 OR IN DRAINAGE SWALES, SOD SHALL BE STAKED SECURELY.
4. TURF ON ALL OTHER AREAS DISTURBED BY CONSTRUCTION SHALL BE RESTORED BY SEEDING, MULCHING AND FERTILIZING. SEED MIXTURE NO.25-121 (FORMERLY MnDOT 240) WILL BE PLACED AT THE RATE OF 70 POUNDS PER ACRE.
5. ALL DISTURBED AREAS TO BE TURF SEEDED, ARE TO RECEIVE 4" TOP SOIL, SEED, MULCH, AND WATER UNTIL A HEALTHY STAND OF GRASS IS OBTAINED. FOR SLOPES STEEPER THAN 3:1 OR IN DRAINAGE SWALES INSTALL EROSION CONTROL BLANKET.
6. ALL DISTURBED AREAS TO RECEIVE NATIVE SEED, ARE TO RECEIVE PLANTING SOIL, SEED, MULCH, AND WATER UNTIL A HEALTHY STAND OF GRASS IS OBTAINED. FOR SLOPES STEEPER THAN 3:1 OR IN DRAINAGE SWALES INSTALL EROSION CONTROL BLANKET.

IRRIGATION NOTES:

1. IRRIGATION SYSTEM TO BE DESIGN/BUILD. CONTRACTOR TO SUBMIT SHOP DRAWINGS FOR APPROVAL OF SYSTEM LAYOUT PRIOR TO INSTALLATION.
2. ALL SOD TO RECEIVE SPRAY OR ROTOR IRRIGATION HEADS WITH MINIMUM DESIGN OF 1" IRRIGATION PER WEEK.
3. ALL PLANT BEDS TO RECEIVE DRIP LINE IRRIGATION , WITH A MINIMUM DESIGN OF .25" IRRIGATION PER WEEK.
4. CONTRACTOR TO INSTALL A TOTAL OF 4 QUICK COUPLERS AT THE CORNERS OF THE PROPERTY. A 2.5" TYPE K SOURCE PIPE IS PROVIDED BY MECHANICAL.

Sambatek
www.sambatek.com
12800 Whitewater Drive, Suite 300
Minnetonka, MN 55343
763.476.6010 telephone
763.476.8532 facsimile
Engineering | Surveying | Planning | Environmental

Client

SHAKOPEE CROSSINGS LIMITED PARTNERSHIP

8170 CARRIAGE COURT NORTH
SUITE 210
SHAKOPEE, MN 55379

Project

SOUTHBRIDGE CROSSINGS EAST 5TH ADDITION

Location

SHAKOPEE, MN

Certification

I hereby certify that this survey, plan or report was prepared by me or under my direct supervision and that I am a duly Licensed LANDSCAPE ARCHITECT under the laws of the State of Minnesota.

Joshua J McKinney

Registration No. 53234 Date: 10/19/2018

This certification is not valid unless wet signed in blue ink. If applicable, contact us for a wet signed copy of this survey which is available upon request at Sambatek, Minnetonka, MN office.

Summary

Designed: GDA Drawn: JMW
Approved: BDB Book / Page:
Phase: PERMIT Initial Issued: 10/19/2018

Revision History

No.	Date	By	Submittal / Revision
A	10/19/18	JMW	Building Revisions

Sheet Title
LANDSCAPE DETAILS

Sheet No. Revision
L2.01 A

Project No. 20787